IOPscience iopscience.iop.org

Home Search Collections Journals About Contact us My IOPscience

CMS data processing workflows during an extended cosmic ray run

This content has been downloaded from IOPscience. Please scroll down to see the full text.

2010 JINST 5 T03006

(http://iopscience.iop.org/1748-0221/5/03/T03006)

View the table of contents for this issue, or go to the journal homepage for more

Download details:

IP Address: 186.217.234.72
This content was downloaded on 06/02/2014 at 16:18

Please note that terms and conditions apply.

PUBLISHED BY IOP PUBLISHING FOR SISSA

RECEIVED: *November 26, 2009*
ACCEPTED: *January 19, 2010*
PUBLISHED: *March 19, 2010*

COMMISSIONING OF THE CMS EXPERIMENT WITH COSMIC RAYS

CMS data processing workflows during an extended cosmic ray run

CMS Collaboration

ABSTRACT: The CMS Collaboration conducted a month-long data taking exercise, the Cosmic Run At Four Tesla, during October-November 2008, with the goal of commissioning the experiment for extended operation. With all installed detector systems participating, CMS recorded 270 million cosmic ray events with the solenoid at a magnetic field strength of 3.8 T. This paper describes the data flow from the detector through the various online and offline computing systems, as well as the workflows used for recording the data, for aligning and calibrating the detector, and for analysis of the data.

KEYWORDS: Detector control systems (detector and experiment monitoring and slow-control systems, architecture, hardware, algorithms, databases); Data acquisition concepts

ARXIV EPRINT: 0911.4842

2010 JINST 5 T03006

© 2010 IOP Publishing Ltd and SISSA

doi:10.1088/1748-0221/5/03/T03006

Contents

1 Introduction **2**

2 Online system **2**

3 High level trigger and data streams **3**
- 3.1 Streams and primary datasets in CRAFT 4

4 Data handling **5**
- 4.1 Tier-0 workflows 5
- 4.2 Data storage and transfers 6
- 4.3 Tier-1 processing 8

5 Reconstruction software **10**
- 5.1 Dedicated reconstruction algorithms for cosmic ray events 10
- 5.2 Deployment of software updates during prompt reconstruction 12
- 5.3 Evolution of Tier-1 reprocessing 12

6 Data quality monitoring and prompt feedback **13**
- 6.1 Online monitoring 14
- 6.2 Offline monitoring 14
- 6.3 Data certification 14
- 6.4 Prompt data analysis and feedback 15

7 Alignment and calibration **15**
- 7.1 AlCaRaw streams 17
- 7.2 AlCaReco skims 18
- 7.3 Alignment and calibration workflows, validation and sign-off of constants 18
- 7.4 Conditions used for reprocessing campaigns 19

8 Conditions **19**
- 8.1 Interval of validity for conditions data and the global tag 20
- 8.2 Population of the conditions database 20
- 8.3 Database population during CRAFT 20

9 Analysis model and tool **21**
- 9.1 CRAB architecture 22
- 9.2 CRAFT analysis activity 22
- 9.3 Analysed data volume 22

10 Summary **23**

The CMS collaboration **28**

2010 JINST 5 T03006

1 Introduction

The primary goal of the Compact Muon Solenoid (CMS) experiment [1] is to explore physics at the TeV energy scale, exploiting the collisions delivered by the Large Hadron Collider (LHC) [2]. The central feature of the CMS apparatus is a superconducting solenoid, of 6 m internal diameter. Within the field volume are the silicon pixel and strip tracker, the crystal electromagnetic calorimeter (ECAL) and the brass-scintillator hadronic calorimeter (HCAL). Muons are measured in drift tube chambers (DT), resistive plate chambers (RPC), and cathode strip chambers (CSC) embedded in the steel return yoke. A detailed description of the experimental apparatus can be found elsewhere [1].

A key element to the success of the experiment is the adequate design, implementation and smooth operation of the data processing workflows from the detector to the end user analysis. The month-long data taking exercise known as the Cosmic Run At Four Tesla (CRAFT) [3] represented a major test for these workflows. This paper describes the technical details of the data flow from the detector to the final analysis. It explains the data acquisition system and the various online and offline computing systems, and describes the software and the workflows used in the data taking chain.

Section 2 describes the online data taking environment and section 3 the high-level trigger chain including the binary raw detector output content. The computing infrastructure used to handle the recorded data is detailed in section 4, and the software and its special setup for reconstructing cosmic ray events in section 5. This is followed by the description of the data quality monitoring and the various validation steps performed during data taking in section 6. The recorded data have been used to derive alignment and calibration constants, which are described in section 7. The management and distribution of the constants via the CMS conditions database system are addressed in section 8, while the analysis of the recorded cosmic ray muon data is described in section 9.

2 Online system

The CMS trigger and data acquisition (DAQ) system is designed to collect and analyse the detector information at the LHC bunch-crossing frequency of 40 MHz. The rate of events to be recorded for offline processing and analysis is about a few hundred Hz. The first-level trigger (L1) is designed to reduce the incoming data rate to a maximum of 100 kHz, by processing fast trigger information coming from the calorimeters and the muon chambers, and selecting events with interesting signatures. The DAQ system must sustain a maximum input rate of 100 kHz, or a data flow of about 100 GB/s, coming from approximately 650 data sources from the different detector components. The DAQ system then reduces this rate by a factor of 1000 using a high-level trigger (HLT, section 3), a software filtering system running on a large processor farm.

The architecture of the CMS DAQ system, described in detail elsewhere [1, 4], is shown schematically in figure 1. The sub-detector front-end systems store data continuously in 40 MHz-pipelined buffers. Synchronous L1 accept signals are distributed to the front-ends via the timing, trigger, and control system. When an accept signal is received, the corresponding data are extracted from the buffers in the front-ends and pushed into the DAQ system through the links in

2010 JINST 5 T03006

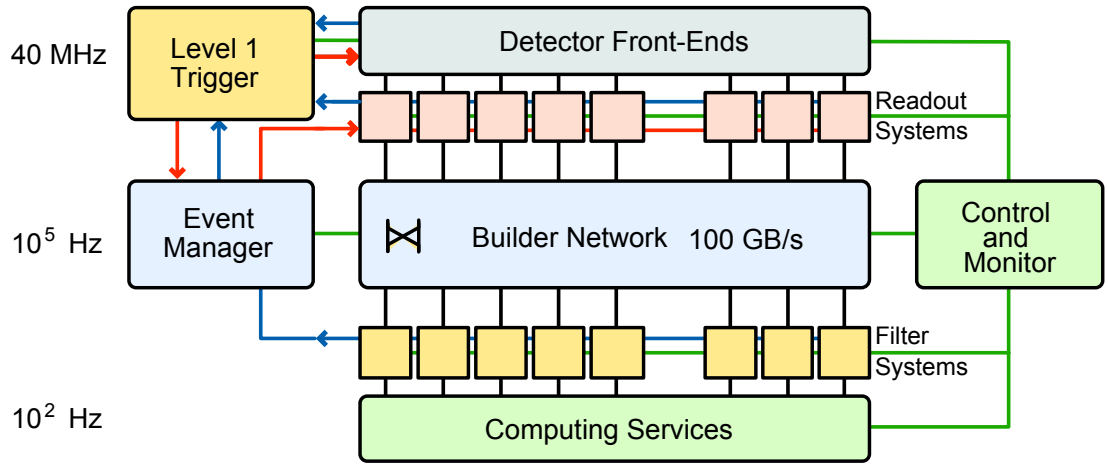

Figure 1. Simplified schematic view of the CMS Data Acquisition System architecture. Shown are the key building blocks for a single slice of the DAQ system.

the readout systems. The various readout fragments coming from different parts of the apparatus are subsequently assembled into complete events (event building) in two stages inside the high-performance builder network. Firstly, the front-end fragments are assembled into larger groups called *super fragments*, which are delivered to readout units organised in eight independent sets (DAQ slices). All super fragments belonging to the same event are given to the same slice which are fed with events in a round-robin fashion. In each slice, individual events are assigned to event buffers (builder units) by an event manager, and each builder unit assembles single events after having obtained all its super fragments from the readout units in the slice. The builder unit hands over complete events to the filter systems running individual filter units upon request. The filter unit runs the HLT algorithms to select events to be accepted for storage, and eventually hands over accepted events to the computing services. In the end, storage managers, one for each slice, stream event data to disk and transfer complete data files to the CMS Tier-0 (section 4). More details about the HLT and data logging are discussed in the following section.

3 High level trigger and data streams

The CMS high-level trigger algorithms are executed in a farm comprising 720 computing nodes, the event filter farm, executing the HLT reconstruction and selection algorithm sequence on individual events in parallel. The products of the HLT execution (e.g. reconstructed physics objects, tracks, etc.) can be added to the event before it is sent to storage, thus facilitating later debugging and analysis of the HLT performance.

The HLT reconstruction uses the same framework as the offline reconstruction [5]. The HLT configuration (menu) is delivered to the individual processes by the run control system [6]. HLT configurations are managed by a configuration system designed around a relational database abstraction of the individual components (reconstruction modules, filters, etc.) and their parameters [7]. An HLT menu consists of a set of *trigger paths*, each consisting of a sequence of

2010 JINST 5 T03006

reconstruction and selection modules. Each path is normally designed to select a specific physics signature (e.g. inclusive muon events). Calibration and other conditions data are retrieved from the online database and distributed to the HLT processes by a hierarchy of cache servers, connecting to a redundant FroNTier server [8] that provides uncomplicated web access to databases. It is used by the CMS software, on all tiers of the distributed-computing infrastructure of CMS, to retrieve calibration and alignment constants (section 4).

Events accepted by the HLT are delivered to the storage manager system (SM) via the same switched network, used for event building. The SM consists of 16 independent processes running on independent computers, and connected through a fibre-channel switch to eight disk arrays, for a total of 320 TB of disk space. The SM is capable of an aggregate maximum throughput to disk of up to 2 GB/s while concurrently transferring complete data files to the Tier-0 at up to 800 MB/s.

For CRAFT, CMS operated 4 slices of the DAQ system using 275 computing nodes and 320 TB of available disk capacity for the SM system.

Routing of individual event data to files in the SM is driven by the definition of output *streams*, which group events selected by specific HLT paths. Several different streams are normally defined to group together events according to their offline usage (e.g. primary "physics" stream, "express" stream, calibration streams, etc.). The same path can feed multiple streams and hence, in general, individual streams can overlap. Within a stream, sets of paths selecting similar signatures (e.g. "inclusive muons", etc.) can be further grouped into primary datasets (PDs). A PD is defined as a subset of the stream consisting of the events satisfying a certain group of paths selected by that stream. The PD definition is subsequently used by the Tier-0 *repacking* step to split the contents of a stream into its component PDs (section 4). Overlaps between streams affect the transfer bandwidth to the Tier-0 while overlaps between PDs primarily affect the disk and tape space consumption of the recorded data. Both the stream and PD definition are intimately connected with the HLT menu, and hence the three are handled as a unit. The same configuration management system is used to maintain and distribute them, and a single identification key is used by the HLT, the SM, and the Tier-0 to retrieve the relevant portion of the configuration from the database.

3.1 Streams and primary datasets in CRAFT

For CRAFT a primary physics stream and several alignment and calibration streams had been defined (see section 7) based on L1 and HLT trigger decisions. The physics stream was divided up into three main physics primary datasets and several "technical" datasets, used for subdetector specific commissioning analyses.

The three physics primary datasets were:

- **Cosmics**: all events satisfying at least one of the muon trigger paths. Those events are mainly used in cosmic ray data analyses. Its rate was around 300 Hz.

- **Calo**: all events satisfying all other L1 physics trigger paths. There was no explicit exclusion of the cosmic ray events trigger path in the Calo dataset, but the overlap was minimal. The Calo dataset was mainly populated by detector noise events and amounted to about 300 Hz.

- **MinimumBias**: all events selected either by a forward hadronic calorimeter technical trigger or by one requiring a minimal activity in the pixel tracker. The MinimumBias dataset

2010 JINST 5 T03006

contained also a fraction of random triggers, useful for commissioning studies. Its rate was about 10 Hz.

The processing of the output streams and their splitting in primary datasets is described in the next section.

4 Data handling

The computing centre at CERN hosts the Tier-0 of the distributed computing system of CMS [9]. The CMS computing system relies on a distributed infrastructure of Grid resources, services and toolkits, to cope with computing requirements for storage, processing, and analysis. It is based on building blocks provided by the Worldwide LHC Computing Grid project (WLCG) [10]. The distributed computing centres available to CMS around the world are configured in a tiered architecture (as proposed in the MONARC [11] working group), that behaves as a single coherent system. The Tier-0 hosts the initial processing of data coming from the detector and corresponds to about 20% of all computing resources available to CMS. The Tier-1 level takes care of subsequent processing and re-processing workflows (section 4.3) and has approximately 40% of the CMS computing resources available, while the Tier-2 level hosts Monte Carlo (*MC*) simulation and analysis and uses the remaining $\sim$ 40% of all CMS computing resources.

All streams defined by the online system (section 2) and the HLT (section 3) are written in a binary data format, referred to as *streamer files*. A transfer system copies the streamer files from the online systems at the detector site to the main CERN computing centre to be converted to a ROOT-based event data format [5, 12], split into primary datasets and stored on tape. A first reconstruction is performed and its output is stored in separate datasets. The event content of the detector measurements is called the *RAW* data-tier and the output of the reconstruction pass is called the *RECO* data-tier.

The primary datasets are distributed amongst seven Tier-1 sites available to CMS for custodial storage and further processing. They are located in France (T1_FR_IN2P3), Germany (T1_DE_FZK), Italy (T1_IT_CNAF), Spain (T1_ES_PIC), Taiwan (T1_TW_ASGC), the United Kingdom (T1_UK_RAL), and the United States (T1_US_FNAL).

In a final step, datasets stored at the Tier-1 sites are served to Tier-2 centres, where the final analysis to extract physics results is performed.

4.1 Tier-0 workflows

The Tier-0 performs the conversion of the streamer files into the ROOT-based event data format (*repacking*) and splits the streams into primary datasets (section 3). This is followed by the reconstruction of the primary datasets. In the case of CRAFT, only the three main physics primary datasets were reconstructed at the Tier-0.

A Python-based processing system [13] with an ORACLE database schema for state tracking (*T0AST*) is used to control a dedicated batch system queue (managed by LSF [14]) to split and process the data. The input and output files are handled by the CERN Advanced STORage manager (CASTOR) mass storage system [15]. Table 1 gives an overview of the volumes of data produced from the central data-handling perspective during CRAFT. CMS collected over 2 billion events

2010 JINST 5 T03006

Table 1. Overview of data produced during the CRAFT run, from the central data-handling perspective.

Number of primary datasets produced	11
Number of events recorded	2×10^9
Number of events in Cosmics primary dataset	370×10^6
Number of runs recorded	239
Total data volume recorded and produced	396 TB
Total data volume recorded and produced in Cosmics primary dataset	133 TB

including technical events for monitoring and calibrations purposes. During data taking, CMS recorded events without magnetic field and with the solenoid at a magnetic field strength of 3.8 T.

In subsequent steps, the output of the reconstruction is used to derive specialised alignment and calibration datasets (section 7) and data quality information is extracted and uploaded to a web server (see section 6).

For these two processing steps, the system normally used for MC production and central processing at the Tier-1 sites was used as a temporary solution ([16], section 4.3). The processing of newly recorded data was triggered periodically during data taking to produce alignment and calibration datasets and upload quality information to a web server. These functionalities are now integrated in the Python-based Tier-0 processing system.

The LSF queue at the Tier-0 was dimensioned for early data taking in Sept. 2008 and allowed for a maximum of 2250 jobs running in parallel. As shown in figure 2, this capacity was never used completely owing to the short reconstruction time of the low-occupancy cosmic ray events. The average reconstruction time in CRAFT was about 0.75 seconds per event. This should be compared to the reconstruction time of proton-proton collision events, which is estimated to be about 5 seconds per event. This estimate was derived from events producing top quark pairs, which do not represent the bulk of the expected events but resemble many of the physics processes of interest for analysis.

The in-bound and out-bound network data rates to the Tier-0 CASTOR disk pool are shown in figure 3. The reading rate peaked at 5 GB/s while the writing rate was always below 1 GB/s. The available network bandwidth was able to support all Tier-0 cosmic ray data taking workflows.

Overall, the Tier-0 infrastructure performed stably and reliably, and was sufficiently provisioned for cosmic ray data taking.

4.2 Data storage and transfers

The CMS computing model foresees at least two copies of all data on independent storage media, for example on tape at two different sites. To fulfill this requirement, all output datasets in ROOT format are stored on tape at the Tier-0. This copy, called the *archival* copy of the data, is only stored for backup purposes and is not accessible for processing workflows. A further copy is distributed amongst the Tier-1 sites for custodial storage on tape. This copy is called the *primary* copy and

2010 JINST 5 T03006

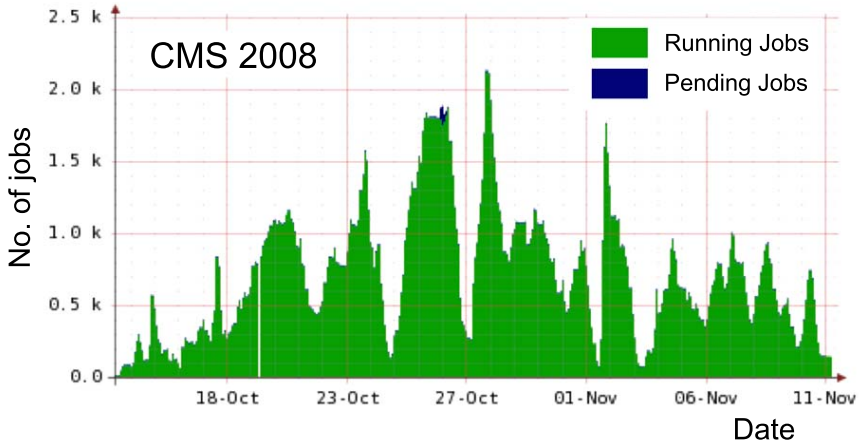

Figure 2. Utilization of the Tier-0 LSF batch queue during CRAFT. The maximum of 2250 batch slots were never fully utilized and all jobs started promptly after submission. (Taken from monitoring sources).

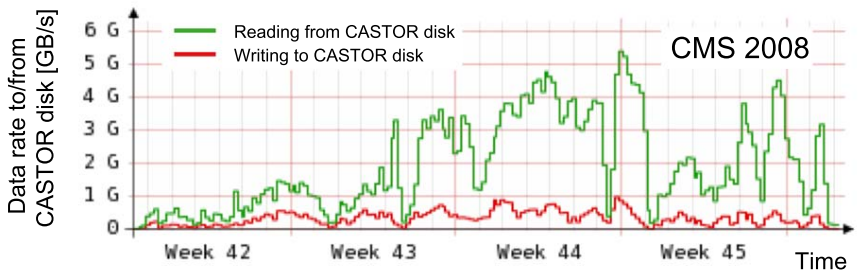

Figure 3. In-bound and out-bound network data rates to the Tier-0 CASTOR disk pool at CERN. The reading rate peaked at 5 GB/s while the writing rate was always below 1 GB/s. (Taken from monitoring sources).

access is provided for further processing on the Tier-1 level (section 4.3) and analysis on the Tier-2 level. As a safety measure during CRAFT, all streamer files were stored temporarily on tape as well.

A data-transfer management system named PhEDEx (Physics Experiment Data Export) [17] is used to handle the movement of data between these computing centres. Deployed at all CMS sites, PhEDEx automates many low-level tasks, such as large-scale data replication and tape migration, and guarantees consistency of the dataset copies. PhEDEx uses standard WLCG transfer tools such as FTS [18] and SRM [19], which interface with the mass storage systems at Tier-1 and Tier-2 centres. PhEDEx provides site managers and users with a centralised system for making data movement requests and provides status and overview information.

During CRAFT, the recorded and processed primary datasets were distributed amongst the Tier-1 sites according to available free tape space taking into account processing capacity and reliability of the Tier-1 sites. For the Cosmics primary dataset, the average size per event for the RAW data tier was 105 kB/event and for the RECO data tier 125 kB/event.

Figure 4 shows the transfer rate during CRAFT from the Tier-0 to the Tier-1 sites. The transfers averaged 240 MB/s with rates exceeding 400 MB/s on several occasions.

2010 JINST 5 T03006

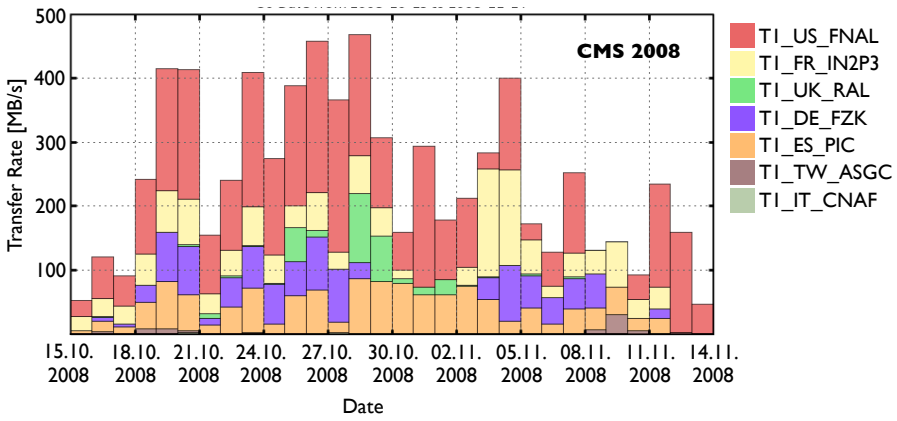

Figure 4. Transfer rates from Tier-0 to Tier-1 centres over the duration of CRAFT. The average was about 240 MB/s. (Taken from monitoring sources).

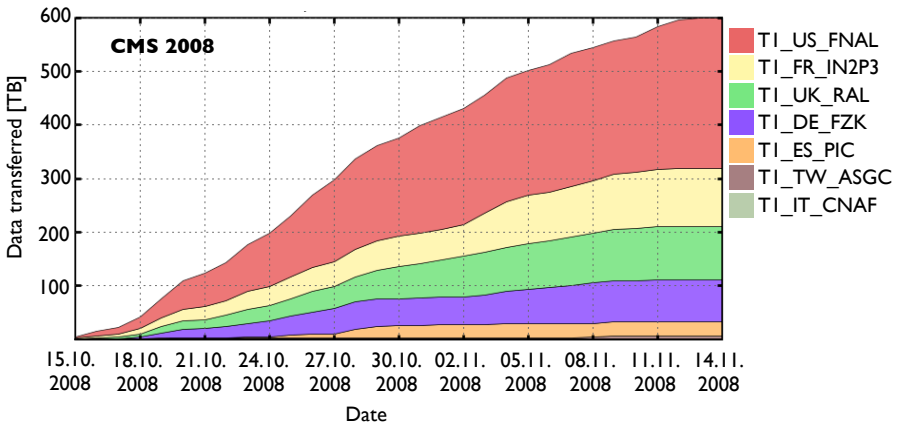

Figure 5. Cumulative transfer volume from Tier-0 to Tier-1 centres over the duration of CRAFT. (Taken from monitoring sources).

During CRAFT, a total of 600 TB was transferred out of CERN to the Tier-1 sites. Figure 5 shows the cumulative transfer volume per Tier-1 site.

Overall, the transfer system performed very well and transferred all CRAFT data reliably to the Tier-1 sites. There was one very large 200 GB file failing transfer to the US Tier-1 site. Being about 20 times larger than the average file size in the dataset, a timeout occurred during each transfer attempt and caused a short delay in analysis of the dataset. Later analysis on the file was performed and safeguards have since been put into place to prevent similar failures from occurring.

4.3 Tier-1 processing

The central processing at the Tier-1 sites was performed using the current MC production system [16]. The system is written in Python [20] and uses a MySQL database [21] to schedule jobs by interfacing with different Grid middlewares [22–24]. However, compared to the Tier-0 system, it does not track the state of every processing step in detail. It was optimised for production

2010 JINST 5 T03006

Table 2. List of skims exercised during CRAFT, showing for each skim the parent primary dataset, acceptance of the skim event selection and output event content combined from different data tiers. The *RAW* data-tier consists of all detector measurements while the *RECO* data-tier contains all reconstructed properties of an event.

Skim name	Prim. Dataset	Acceptance	Event Content
SuperPointing	Cosmics	0.27%	RAW-RECO
TrackerPointing	Cosmics	4.50%	RAW-RECO
MultiMuon	Cosmics	0.44%	RECO
PtMinSelector	Cosmics	0.68%	RECO
CSC_Skim	Cosmics	3.84%	RAW-RECO
CSC_Skim_BFieldStudies	Cosmics	0.04%	RAW-RECO
HCALHighEnergy	Cosmics/Calo/MinBias	0.09% (on Cosmics)	RAW-RECO
ECALSkim	Cosmics/Calo	0.40% (on Cosmics)	RECO

of Monte Carlo samples, for which 100% accountability is not a primary concern because more events can be easily generated in the case of failures or infrastructure problems.

The requirements for the Tier-1 processing workflows are in fact very different compared to MC production workflows. During processing on the Tier-1 level, an input RAW or RECO dataset is processed to either prepare a new reconstruction pass with updated software and/or conditions and alignment constants (*re-reconstruction*) or to extract events of interest from the total dataset to reduce the amount of data to be analysed (*skimming*). Accounting of the processing of every single input event is of highest priority as all events have to be accounted for in order to correctly calculate the luminosity for the processed LHC collisions.

In the near future, the used Monte Carlo production system will be completely redesigned based on the state tracking technology of the Tier-0 processing system. Guaranteeing 100% accountability, the new system is planned to be put into operation in spring 2010.

In CRAFT, the physics primary datasets were skimmed to reduce the amount of data for physics analyses to process, still keeping full physics content. Some skims combined the RAW and RECO event content in the same dataset to simplify debugging of the software and low-level analysis of the events. In addition, many skims were used for re-reconstruction to validate new algorithms or new derived alignment and calibrations conditions thus reducing the number of full reprocessings.

The list of skims exercised during CRAFT is shown in table 2 by listing the parent primary dataset and acceptance of the skim event selection as well as the output event content of each skim.

The *SuperPointing* and *TrackerPointing* skims preferentially selected events containing muons whose propagation loosely traversed the Pixel and Strip tracker regions, respectively. The *MultiMuon* skim contained events with more than four reconstructed muons for muon shower analyses, while the *PtMinSelector* skim retained only events with high-energy muons ($p_T > 50\,\mathrm{GeV/c}$).

The *CSC_Skim* skim selected events with activity in the CSC endcap muon detectors. In addition, good segments from CSC hits were selected in the *CSC_Skim_BFieldStudies* skim, which were used in a measurement of the magnetic field in the endcap yoke regions.

2010 JINST 5 T03006

The *HCAL* skim selected events with high energy deposits in the HCAL and the *ECAL* skim was selecting events with high energy deposits in the ECAL due to either showering muons or noise activity.

Two re-reconstruction passes of all data taken in CRAFT were made after the data taking period ended. The first pass was started in November 2008 and finished in January 2009. It suffered significantly from infrastructure and technical problems. After improvements, a second pass was performed from the 12th to the 25th of February 2009. Both re-reconstruction passes produced the associated alignment and calibration datasets, as was done for the Tier-0 processing.

The major issue observed during the re-reconstruction was the lack of complete accountability of the reprocessing system. This complicated the task of identifying job failures, which had to be done manually. The net result was that a very small fraction (about a few percent) of the final processing was incomplete.

This will be addressed in the future by the new Tier-1 processing system, developed for LHC collision running.

5 Reconstruction software

The main goals of event reconstruction in the context of CRAFT were to provide a reliable cosmic ray event reconstruction in order to support detector performance, calibration, and alignment studies, as well as testing as much as possible the software components to be used in proton-proton collision events with the LHC.

In order to accomplish these objectives, a dedicated configuration of the reconstruction software tools was prepared and optimised for cosmic ray muon events. While some part of the reconstruction code developed for proton-proton collisions could be basically re-used, many key elements needed additional code development to support the reconstruction of cosmic ray muon events. The code developed for proton-proton collision events is nevertheless used and tested wherever possible. In several cases, two or more reconstruction algorithms performing similar tasks have been run in parallel to gain experience (table 3).

In the following section we briefly describe the major changes in reconstruction code during the CRAFT data taking period.

5.1 Dedicated reconstruction algorithms for cosmic ray events

Local reconstruction in the electromagnetic calorimeter. In parallel with the standard ECAL local reconstruction, an additional algorithm has been used to provide a better measurement of the energy deposited by a cosmic ray muon [25]. The standard algorithm is optimised for particles reaching the ECAL crystals within a very narrow time window, as appropriate for LHC collisions, while in case of cosmic ray muons the actual time of arrival is spread over the 25 ns of the bunch clock interval. The modified algorithm performs a fit of the pulse shape, sampled tenfold by the ECAL hardware, and thus provides a precise measurement of both the energy and the arrival time of the cosmic ray muon. While particles from LHC interactions release energy in only a few crystals, cosmic ray muons cross the ECAL surface at a wide range of incidence angles, which can spread the energy deposit over a sizable number of crystals. A dedicated version of the clustering algorithm has been used to collect this energy most efficiently.

2010 JINST 5 T03006

Table 3. Summary of the different reconstruction algorithms used during CRAFT. The central column indicates the main algorithm executed as input to subsequent steps. The right column shows the alternative algorithms performed in parallel. See section 5.1 for details.

Component	**Default Code/Configuration**	**Alternative versions**
Tracker local	standard	none
ECAL	pulse fit based	standard weight based
HCAL	threshold for cosmic ray events	none
DT	standard	no-drift (coarse hits) , t_0 fitting
CSC	standard	none
RPC	standard	none
Tracking	dedicated seeding and navigation	Road Search (cosmic version) Cosmic Track Finder (no pattern reco) track splitting (up/down)
Muon	dedicated cosmic muon reconstruction	barrel/endcap only different DT local reco LHC vs. Cosmic navigation and fit single-leg vs. two-leg
Jet and MET	standard	none
Electron/Photon	subset of standard	none
B tagging	not run	none
Particle Flow and Tau reconstruction	not run	none

Track reconstruction within the Tracker. The track reconstruction for CRAFT is largely based on the methods already employed for the Magnet Test and Cosmic Challenge (MTCC) in 2006 [26, 27], and the Tracker Integration Facility (TIF) sector test [28] in Spring 2007. The main differences compared to standard tracking for collisions are in the *seeding* and in the *navigation* steps. Seeding combines hits from several neighbouring layers to generate the starting point for the track pattern recognition and is mainly based on the pixel system in case of LHC collision events; this has been modified to be able to reconstruct those trajectories not crossing the very small pixel volume. The modified seeding mainly uses those layers of the silicon strip tracker that provide a three dimensional position measurement. Navigation, on the other hand, provides the set of the paths the particle can possibly have taken between one tracking layer and another; these sets differ considerably between cosmic ray muons and particles originating from the central interaction point.

For diagnostic purposes, the concept of top-bottom track splitting has been introduced, in which the incoming and outgoing part of the cosmic ray muon trajectory, with respect to the point of closest approach to the beam line, are reconstructed as separate tracks. Comparison of the parameters of these two *legs* serves as a powerful instrument for alignment and tracking performance studies [29].

2010 JINST 5 T03006

Reconstruction of muons. This section describes the reconstruction of muon trajectories in the CMS muon system. When possible, the muon system part of the trajectory is combined with a track reconstructed within the tracker, resulting in a *global muon track*.

Several different flavours of muon reconstruction are used combining different configurations of the various components. As described in ref. [30] it is possible to perform dedicated cosmic ray muon reconstruction as a single track (referred to as *single leg* mode), or split the trajectory into an incoming and outgoing track (*two legs*). Alternatively, the standard reconstruction for collision events can be used, in which optionally the reconstruction can be restricted to either the barrel or the endcap regions.

Muon reconstruction also depends on the local reconstruction of the DT, RPC, and CSC subdetectors, for which different variants are available. For reconstruction of the DT track segments, two options are addressing the fact that cosmic ray muons, contrary to those from collisions, arrive at an arbitrary time not correlated to the bunch clock. The t_0-*corrected* segment reconstruction treats the arrival time t_0 as an additional free parameter in the fit, while the *no-drift* variant does not use drift time information at all, resulting in relatively coarse point resolution.

The final *reconstructed muon* object combines all the information available for a reconstructed muon, including standalone muon reconstruction (using only DT, RPC, CSC), global muon reconstruction (matching the track from standalone muon reconstruction with the silicon tracker track), and tracker-based reconstruction (matching the tracker tracks with muon segments).

5.2 Deployment of software updates during prompt reconstruction

In view of the large-scale commissioning nature of CRAFT, prompt reconstruction is one of the workflows for which a low latency of code corrections is important. Fast deployment of bug fixes may generally become necessary when new major releases have been deployed for the first time, when running conditions change drastically, or in the early stage of a data taking period. Most of the problems encountered during CRAFT were related to unexpected detector inputs and lack of corresponding protections in the code to handle them properly.

The procedure for deploying an update was handled by several different shift roles with different responsibilities. The prompt reconstruction operator reported job failures. These failures were investigated by the offline run manager who identified the code to be fixed and contacted the appropriate experts. A minimal bug fix was usually provided within a few hours; if no correction could be achieved on this time scale, the corresponding reconstruction feature was disabled to restore Tier-0 operations. This update was provided either as a new configuration or as a new software release.

The CRAFT experience has been a driving element for CMS to introduce a patch-release system to reduce the time required for deployment of new code. It is also seen as an advantage to be able to pause the Tier-0 processing for about 24 hours if necessary to take actions. These two points, combined with the fast feedback that an additional express stream processing will provide, should allow minimising the Tier-0 inefficiency due to reconstruction software failures in future data taking.

5.3 Evolution of Tier-1 reprocessing

The two reprocessing cycles executed at Tier-1 centres allowed the reconstruction to be rerun with updated detector conditions (see section 7.4 for details) and to improve the reconstruction code.

2010 JINST 5 T03006

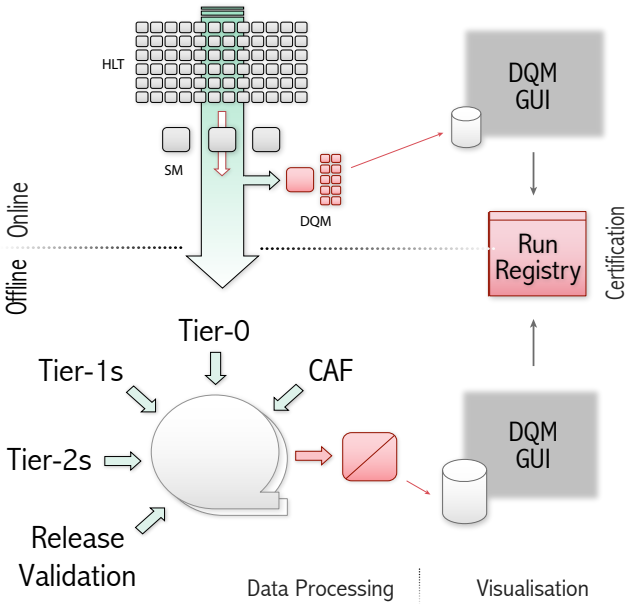

Figure 6. Sketch of the DQM system, consisting of branches for online and offline monitoring.

In addition, these reprocessing steps were used to tailor slightly the content of the reconstruction output files according to requests from the commissioning and alignment groups. The biggest changes concerned the muon reconstruction and the track reconstruction in the tracker.

6 Data quality monitoring and prompt feedback

Data quality monitoring is critically important for ensuring a good detector and operation efficiency, and for the reliable certification of the recorded data for physics analyses. The CMS-wide DQM system comprises:

- tools for creating, filling, transporting, and archiving of histograms and scalar monitor elements, with standardised algorithms for performing automated quality and validity tests on distributions;
- online monitoring systems for the detector, trigger, and DAQ hardware status and data throughput;
- offline monitoring systems for reconstruction and for validating calibration results, software releases, and simulated data;
- visualisation of the monitoring results;
- certification of datasets for physics analyses.

The main features of the DQM system, as operated during the CRAFT data taking period, are shown in figure 6. A detailed experience report can be found elsewhere [31]. DQM for data taking is performed in two different stages, with very small latency during the data taking (online) and after prompt reconstruction of the events (offline).

2010 JINST 5 T03006

6.1 Online monitoring

The online DQM system consists of a number of consumer applications, labelled as DQM in figure 6, usually one per subsystem, which receive event data through a storage manager event server and fill histograms at an event rate of 10–15 Hz.

In addition, a small number of histograms is filled in the HLT filter units, which process events at up to 100 kHz. These histograms are shipped out to DQM consumer applications periodically. Identical histograms are summed up across different filter units in the storage manager.

All the histogram data, including alarm states based on quality test results, are made available to a central DQM graphical user interface server (GUI) for visualisation in real time [32], and are stored in a ROOT file periodically during the run. At the end of the run the final archived results are uploaded to a large disk pool. Eventually, the files are merged and backed up to tape.

All DQM data processing components and the event display start and stop automatically under centralised CMS run control [33]. The web servers for the DQM GUI [32] and web-based conditions monitoring (WBM) [34] are long-lived server systems which are independent of the run control.

6.2 Offline monitoring

The offline DQM system accumulates monitoring data from several workflows in CMS, namely Tier-0 prompt reconstruction, re-reconstruction at the Tier-1s and the validation of the alignment and calibration results, the software releases, and all the simulated data.

CMS has standardised the monitoring of the event data processing into a two-step workflow:

1. The histogram monitor elements are created and filled with CMS event data information. The histograms are stored along with the processed events into the normal output event data files. When the CMS data processing systems merge output files, the histograms are automatically summed to form the first partial result.

2. At the end of the data processing the histograms are extracted from the job output data files and summed together across entire runs to yield full event statistics. The final histograms are then used to calculate efficiencies and are checked for quality, by making comparisons with reference distributions. The histograms, certification results, and quality test results are saved into a ROOT file, which is then uploaded to a central DQM GUI web server. In the web server, the files are merged and backed up to tape; recent data are kept cached on disk for several months.

Online and offline DQM GUI web servers provide a common interface, and are linked together as one entity, giving the entire world-wide collaboration access to inspection and analysis of all DQM data at one central location.

6.3 Data certification

CMS uses a database with a front-end web application, the run registry, as the central workflow tracking and bookkeeping tool to manage the creation of the final physics dataset certification

2010 JINST 5 T03006

result. The run registry is both a user interface managing the workflow and a persistent storage of the information.

The work to evaluate the detector and physics object data quality is organised in shifts. The shift persons follow instructions specifically tailored to catch problems. The observations are entered in the run registry database where they are available to detector and physics object groups, as well as the whole collaboration, for inspection and confirmation. Final certification results are produced at regular sign-off meetings, typically once per week, before they are delivered to the experiment by storage in the data bookkeeping system (DBS) [35]. The information in DBS is associated with the primary datasets and is input to the creation of analysis datasets by analysis groups.

Online shifts take place continuously during detector operation at the CMS detector site. Offline DQM shifts are carried out at daytime at the CMS centre [36] on the main CERN site. The shift activities are also supported by regular remote shifts, two shifts per day at Fermilab and one shift per day at DESY, at the local CMS centres [37].

6.4 Prompt data analysis and feedback

The central DQM shift activity is complemented by the prompt feedback groups, one for each subsystem, which consist of subsystem experts located at the CMS centre. These groups analyse the prompt reconstruction output and integrate the data quality information in a timely way. The CMS CERN Analysis Facility (CAF) [38], providing large CPU power and fast access to the data stored on a local CASTOR disk pool [15], was heavily used for such analyses.

The run-by-run DQM results were used to monitor the time evolution of the detector behaviour. Any observed change was carefully checked and tracked. As an example, figure 7 shows the evolution of the relative number of hits on tracks in the tracker inner barrel detector as a function of the run number. The step in the distribution is due to improved alignment parameter errors applied to the later data. During reprocessing, the improved parameters were applied to all data, thus removing the step.

Table 4 shows the number of good events in the Cosmics primary dataset, based on the quality assignment described above. The breakdown for each subsystem is given when operating nominally and passing the offline selection criteria. Most of the subsystems declared individually more than 85% of the recorded data in the Cosmics primary datasets as good. Having declared a detector component as good does not entail having detected a cosmic ray muon within its fiducial volume. Figure 8 shows the accumulated number of cosmic ray triggered events as a function of run number with the magnet at its operating central field of 3.8 T, where the minimal configuration of the silicon strip tracker and the DT muon system delivering data certified for further offline analysis was required. It was not required to keep the other systems in the configuration. A total of 270 million such events were collected.

7 Alignment and calibration

This section describes the workflows used to compute and improve the alignment and calibration constants. While some calibrations are already performed online at the CMS detector site, this section will focus on the workflows performed at the Tier-0 site and at the CAF.

2010 JINST 5 T03006

Table 4. Cosmic ray triggered events collected during CRAFT in the Cosmics primary dataset in periods when the magnetic field was at the nominal value of 3.8 T with the listed detector system (or combination of systems) operating nominally and passing offline quality criteria. The minimum configuration required for data taking was that at least the DT barrel muon chambers and the strip tracker passed the quality criteria. The other subdetectors were allowed to go out of data taking for tests.

Quality flag	Events (millions)
(none)	315
Trigger	240
Pixel Tracker	290
Strip Tracker	270
ECAL	230
HCAL	290
RPC	270
CSC	275
DT	310
DT+Strip	270
All	130

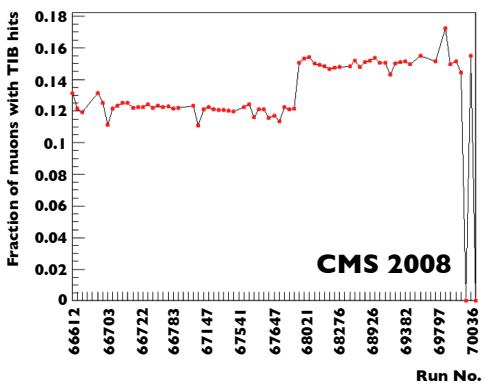

Figure 7. Evolution of the relative number of hits on muon tracks in the tracker inner barrel detector. The step in the distribution is due to improved alignment parameter errors applied to the later data.

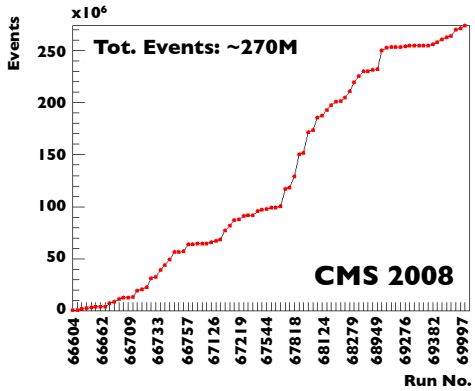

Figure 8. Integrated statistics vs. run collected during CRAFT in the Cosmics dataset for runs with good quality flags from the drift tubes and the silicon strip tracker. Only runs with magnetic field of 3.8 T have been considered.

The basic offline workflow for alignment and calibration in CRAFT was a slightly simplified version of the full model for collisions, and it is illustrated in figure 9. Commissioning experience from this workflow in the context of a challenge with simulated events has been reported elsewhere [39]. Event information relevant for alignment and calibration was streamed from the CMS detector site via the standard physics event stream (section 3), and via a special calibration stream and streams with special event content, labeled "AlCaRaw" (described below), dedicated to

2010 JINST 5 T03006

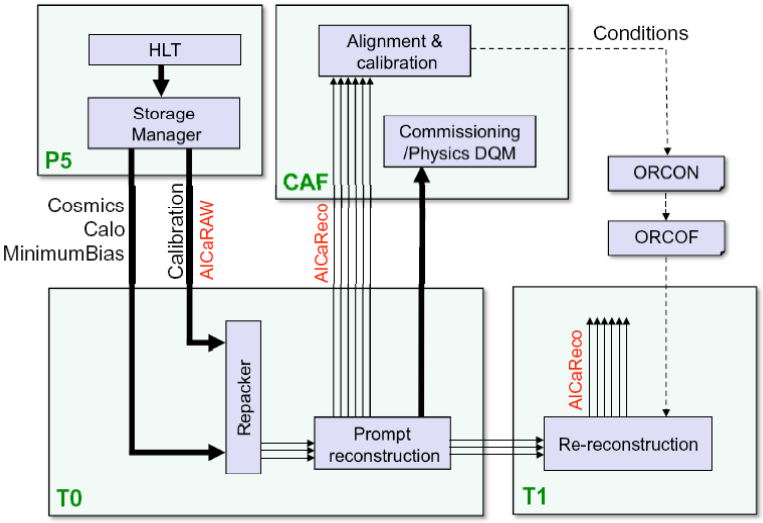

Figure 9. Offline workflow for alignment and calibration used during CRAFT.

particular calibration procedures. Events from these streams passed the conversion to the ROOT-based event data format at the Tier-0 (section 4.1) and in the case of the physics stream entered the prompt reconstruction process. The reconstructed data were then skimmed to create a series of "AlCaReco" datasets that were transferred to the CAF to be used as input to alignment and calibration algorithms. The AlCaReco datasets are designed to contain only the minimal amount of information required by the associated alignment and calibration workflows. The skims producing them performed both event selection, starting from a selection based on HLT bits, and reduction of event content. The alignment and calibration workflows, performed at the CAF, used the AlCaReco datasets to generate alignment and calibration constants that were validated and uploaded to the conditions database. Re-reconstruction at the Tier-1 sites, using the new constants, also generated new AlCaReco datasets that were used in turn as input to the next series of improvements on alignment and calibration constants.

7.1 AlCaRaw streams

Some calibration procedures in CMS require a very high event rate of typically a few kHz in order to achieve the targeted precision in the time scale of a few days. These events would saturate the available bandwidth between the CMS cavern and the Tier-0 site if the full event content were transferred. This concerns in particular the ϕ symmetry calibration procedures for ECAL and HCAL, and the ECAL calibration with neutral pion decays. The solution is the creation of special data streams called AlCaRaw already within dedicated high-rate triggers at the HLT farm, which contain only the minimal information needed for these workflows. These AlCaRaw streams have been successfully generated for a significant part of the CRAFT run, accumulating over 160 million events (for each, ECAL and HCAL) for the ϕ-symmetry streams. Detailed information about the AlCaRaw streams produced in CRAFT can be found in ref. [40].

2010 JINST 5 T03006

Table 5. AlCaReco datasets produced in CRAFT.

Dataset	Number of events	Purpose
TkAlCosmicsHLT	4.3 M	Tracker alignment
TkAlCosmics0T	4.9 M	Tracker alignment (no p_T cut)
MuAlStandaloneCosmics	288 M	Muon standalone alignment
MuAlBeamHaloOverlaps	3.3 M	Muon endcap alignment
MuAlGlobalCosmics	5.5 M	Muon system alignment w.r.t. tracker
HcalCalHOCosmics	313 M	HCAL HO calibration
HcalCalDiJets	67 M	HCAL calibration
MuAlCalIsolatedMu	52 M	Muon system alignment, DT calibration
RpcCalHLT	241 M	DT calibration, RPC monitoring

7.2 AlCaReco skims

During the global runs that CMS performed in 2008, the number of AlCaReco skims produced as part of prompt Tier-0 processing has been steadily increased. The set of AlCaReco datasets that have been produced in CRAFT is listed in table 5. This list also contains datasets that are not meaningful for calibration with cosmic muon data and have been included only for commissioning the production system. As a result, nine AlCaReco skims have been created in parallel, which is comparable with the maximum number anticipated for a given PD during LHC collisions, thus constituting an important scaling test for the CMS alignment and calibration framework. The number of events given in the table, which corresponds to the output of the prompt processing, reflects the selection mechanism. For example, the MuAlStandaloneCosmics dataset did not require tracker information and thus selected a large part of the overall CRAFT event sample. The TkAlCosmics0T dataset, which was originally designed for runs without field, required a trajectory reconstructed in the tracker and thus selected slightly more than one percent of the standalone muon sample. The TkAlCosmicsHLT skim required the corresponding HLT trigger bit and selected only particles with a transverse momentum cut above 4 GeV/c, which resulted in a slightly smaller sample. Low noise thresholds allowed the population of the HcalCalDiJets sample.

7.3 Alignment and calibration workflows, validation and sign-off of constants

All workflows deriving alignment and calibration constants have been performed at the CAF based on the AlCaReco datasets. The derived constants have been uploaded to the CMS conditions database. The management of conditions within the database is explained in more detail in section 8. Standardised validation procedures have been applied to certify the correctness of the constants. The validation results have been reviewed in a formalised sign-off procedure, to ensure the quality of database constants that are used for any central processing. Special care has been taken regarding the interdependencies of the various workflows.

2010 JINST 5 T03006

7.4 Conditions used for reprocessing campaigns

The first comprehensive alignment and calibration campaign started immediately after the end of data taking. The set of constants used for the first reprocessing of the full CRAFT dataset included the following: tracker alignment and alignment error estimates, strip tracker gain calibration, bad strip and bad fiber maps, pixel tracker gain and pedestal constants, internal track-based alignment constants for the barrel muon DT chambers [41], global longitudinal positions and tilt angles from the optical alignment systems for most of the endcap muon chambers [42], muon DT inter channel synchronization, time pedestal and noise calibration constants [43], gain and pedestal calibration constants for both ECAL and HCAL. All constants were ready, validated, signed-off and included in the official set of conditions on 20 November 2008, about two weeks after the end of data taking.

The second pass of alignment and calibration was performed after the results of the first reprocessing became available around the middle of January 2009. Tracker gain calibration was updated and calibration of the Lorentz angle was added. Tracker alignment was further improved [29], benefiting also from the Lorentz angle calibration, and from an increased number of pixel hits available due to the updated alignment error estimates. The muon chambers were aligned relative to the tracker with global tracks [41]; in addition, the optical alignment of the endcap system was extended [42]. Drift-tube calibration was updated following an improved reconstruction in the inner chambers of the wheels closest to the endcaps in the presence of the magnetic field [43]. HCAL pedestals and gains were improved, and inter-calibration constants for the ECAL endcaps were updated based on laboratory measurements combined with information from laser data taken during CRAFT [44]. These constants were used in the second reprocessing of the CRAFT data.

8 Conditions

The CMS conditions database system relies on three databases for storing non-event data:

1. OMDS (Online Master Database System) is in the online network at the detector site; it stores the data needed for the configuration and proper settings of the detector (*configuration data*), and the *conditions data* produced directly from the front-end electronics. For example, the Data Control System (DCS) information is stored with the ORACLE interface provided by PVSS [45].

2. ORCON (Offline Reconstruction Condition DB Online subset) is also located at the detector site. It stores all the condition data, including calibration and alignment constants, that are needed for the reconstruction of physics quantities in the HLT, as well as for detector performance studies. These are a small subset of all the online constants. These data are written using the POOL-ORA [46] technology and are retrieved by the HLT programs as `C++` objects.

3. ORCOFF (Offline Reconstruction Condition DB Offline subset) is located at the CERN computing centre. It contains a copy of the information in ORCON, kept in sync through ORACLE streaming [47]. Data are retrieved by the reconstruction algorithms as `C++` objects.

2010 JINST 5 T03006

In order to guarantee consistency of the data in ORCON and ORCOFF, it is one of the CMS policies to write any condition data needed for offline purposes to the ORCON database. ORACLE streaming provides the transfer from ORCON to ORCOFF.

8.1 Interval of validity for conditions data and the global tag

All conditions data are organised by condition database tags. A tag points to one or more instances of a given type of condition data (e.g. ECAL pedestals), each of which has an associated interval of validity (IOV). The IOV is a range of events which is contiguous in time, for which that version of the condition data is valid. This range is normally defined in terms of run numbers, but can also be defined in terms of absolute time. While some conditions are only valid for the specific run for which they are measured (e.g. beamspot, pedestals), other conditions can be valid for any run (e.g. calorimeter intercalibration constants). Each payload object in ORCON/ORCOFF is unambiguously indexed by its IOV and a tag.

The full consistent set of conditions which needs to be accessed by the HLT and offline reconstruction software is defined in a *global tag*, which consists of one tag for each type of condition data. For a given event, the reconstruction algorithms query the corresponding conditions data by means of the global tag.

8.2 Population of the conditions database

The flow of conditions data is illustrated in figure 10. Conditions data that are produced online are initially stored in OMDS. The subset of online conditions that are required for the HLT and offline reconstruction is extracted and sent to ORCON. This data transfer is operated using a framework named PopCon (Populator of Condition [48]). PopCon encapsulates the relational data as POOL-ORA objects and adds meta-data information (the tag to which the object belongs and the IOV), so that the data is correctly indexed for reading by the HLT and offline software. Moreover, PopCon has the additional functionality of logging specific information about any transaction writing to the ORCON database.

Further conditions are produced by the alignment and calibration workflows operated offline, as described in section 7; these are directly uploaded to the ORCON database, again using PopCon.

Finally, all data in ORCON are transferred to ORCOFF, which is the database used for all offline processing and analysis, via ORACLE streaming.

For massively parallel read-access, the ORCON and ORCOFF databases are interfaced with a cache system referred to as "FroNTier," which in the case of ORCOFF is the mechanism used to distribute conditions data to the Tier-1 and Tier-2 centres outside CERN. Caching servers are used to cache requested objects to avoid repeated access to the same data, thus significantly improving the performance and greatly reducing the load on the central database servers. Further details can be found in ref. [8].

8.3 Database population during CRAFT

During the CRAFT run, the majority of conditions data were transferred into the offline database using the PopCon application. A central procedure, based on an automatic uploader via a dedicated machine in the online network, was successfully deployed during 2008 [48].

2010 JINST 5 T03006

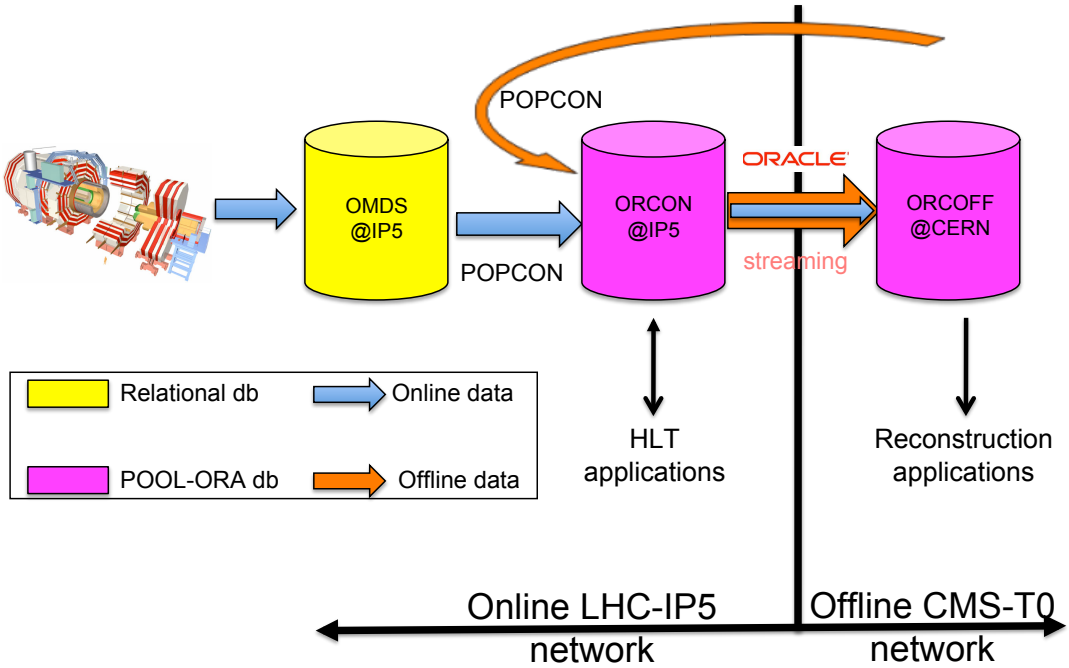

Figure 10. Conditions databases architecture.

A set of automatic jobs was set up for each sub-detector, in order to both populate the ORCON database and monitor any transaction to it. Each automatic job is associated with a "watchdog" tool that monitors its status. A dedicated web interface was set up on a CMS web server in order to monitor all database transactions. PopCon was used by almost all sub-detectors and an average of one hundred PopCon applications per day were run during CRAFT.

During the entire duration of CRAFT the total amount of conditions data written to ORCON was about 1 TB. ORCON-ORCOFF streaming and the FroNTier caching mechanism operated smoothly throughout CRAFT.

9 Analysis model and tool

In this section, the model and the tool to analyse the recorded and reconstructed data are described. CMS uses a distributed data-analysis model [9] mostly based on the WLCG Grid infrastructure. It also supports low-latency access to data on the CAF for prompt analysis and calibration. The CMS analysis model is data-location driven, i.e. the user analysis runs where data are located. The related workflow is mainly characterised by the following steps: interactive code development using small data samples; job preparation and configuration to run over higher statistics (hence to access the whole dataset or a significant part of it); and interactive analysis of the obtained results. With the increasing complexity of the computing infrastructure, the implementation of such a workflow became more and more difficult for the end user. In order to provide the physicists an efficient access to the distributed data while hiding the underlying complexity, CMS developed and deployed a dedicated tool named CMS Remote Analysis Builder (CRAB) [49], which is described in the following.

2010 JINST 5 T03006

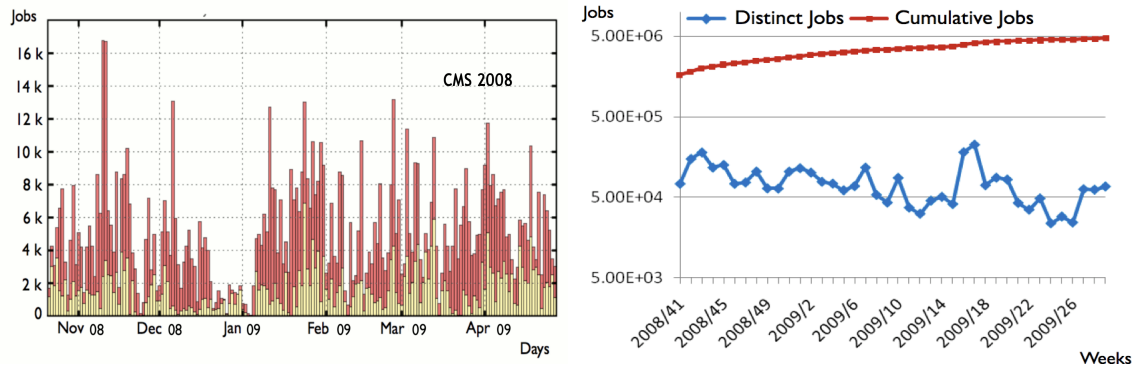

Figure 11. CRAFT jobs distributions as a function of time. Left: Daily distribution of analysis jobs submitted using CRAB and accessing CRAFT data. Grid (dark shading, red) and CAF (light shading, yellow) activities are shown. (Taken from monitoring sources). Right: CRAFT jobs submitted only at CAF (with and without CRAB). The upper line shows the cumulative number of jobs, the lower line shows the number of jobs submitted each week. The time window extends well beyond the end of CRAFT data taking to cover the extensive period of analysis.

9.1 CRAB architecture

CRAB is the official CMS tool for distributed analysis. The system, which guarantees interoperability with the various grid flavours and batch submission systems, has evolved into a client-server architecture. The client provides the user interface and is a command line Python [20] application which mainly takes care of the local environment interaction and packages private user library and code, in order to replicate remotely the very same local configuration. The server is the intermediate service responsible to automate the user analysis workflow with resubmissions, error handling, and output retrieval thus leaving to the user just the preparation of the configuration file. The server also notifies the user of the output availability. The server architecture is made of a set of independent components communicating asynchronously through a shared messaging service and cooperating to carry out the analysis workflow.

9.2 CRAFT analysis activity

The CRAFT data have been analysed both at CERN (using the local batch system at the CAF), and on the Grid making use of distributed resources (Tier-2). While access to data on Tier-2 sites has been performed exclusively by CRAB, the CAF queues have been used to run both CRAB and non-CRAB jobs. The large fraction of non-CRAB jobs executed at the CAF is partially due to calibration and alignment workflows, which are for the time being not integrated within the CRAB framework. The collaboration is currently evaluating the best strategy for a proper integration of such workflows.

9.3 Analysed data volume

From October 2008 to the beginning of May 2009 more than 2 million analysis jobs accessed CRAFT data, including both CRAB and non-CRAB jobs. The quoted value takes into account both CAF and Grid activity (figure 11). Figure 12 shows the cumulative numbers of distinct users which performed CRAFT data analysis in the considered time window. The shapes, combined with daily

2010 JINST 5 T03006

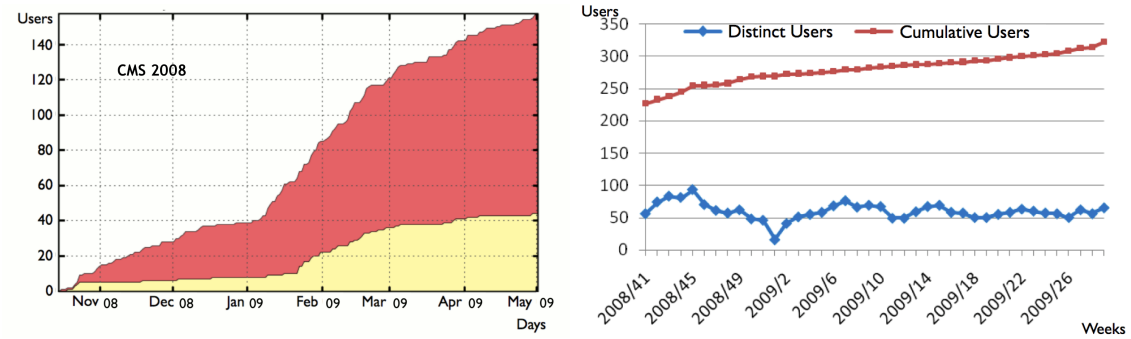

Figure 12. Cumulative plot of number of different users accessing CRAFT data as a function of time. Left: users using CRAB to submit Grid (dark shading, red) and CAF (light shading, yellow) jobs. (Taken from monitoring sources). Right: number of users submitting jobs only at CAF (with and without CRAB). The lower line shows the number of users per week, the upper line the integrated number over a long period. The time window extends well beyond the end of CRAFT data taking to cover the extensive period of analysis.

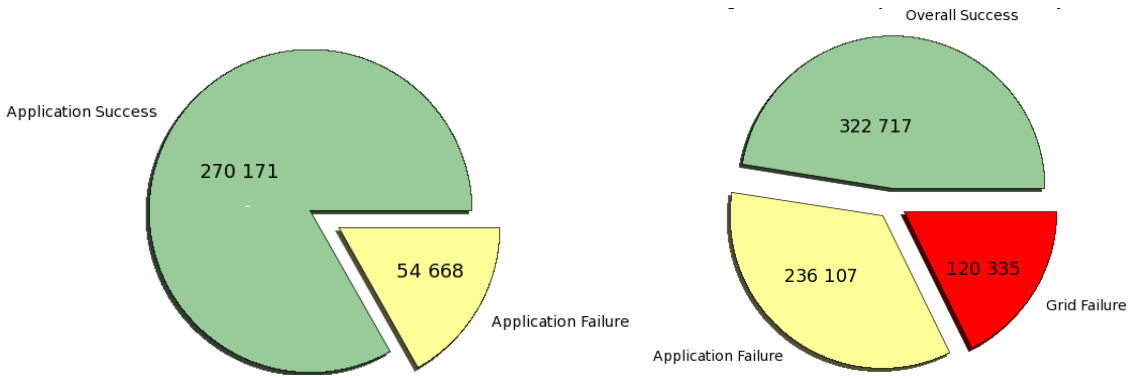

Figure 13. Success rate of CRAFT analysis jobs submitted using CRAB. Left: jobs submitted only at CAF. Right: jobs submitted through the Grid.

jobs distribution, give a clear indication of how the user community increased continuously. Referring to the same time interval it is estimated that more than 200 distinct users in total performed CRAFT analysis activities. As shown in figure 13, the overall efficiency of CRAFT analysis jobs is approximately 60%. Local submissions on the CAF were 85% efficient. The main source of failures of Grid CRAFT jobs are remote stage-out problems, which will be addressed in the future by a new workload management infrastructure. In general, there is a 10% failure rate due to problems within the user code. No relevant bottlenecks were experienced by the system during CRAFT.

10 Summary

Data taking with cosmic ray muons during the CRAFT exercise in 2008, which lasted about a month, has provided a wealth of experience in operating the workflows from recording to analysing the data. The online system and the high level trigger have been operated continuously, and besides stress-testing the general reliability, major functionalities have been exercised. These include the

2010 JINST 5 T03006

definition of streams and primary datasets, and the interaction with associated HLT menus, for which efficient online-offline interplay is essential.

Data handling has been confronted with almost the full qualitative complexity expected for collisions. Most of the Tier-0 related processing has been handled with the final software infrastructure and performed very well. The setup for collisions will still require the ramp-up of the express stream infrastructure for prompt calibration and monitoring, and inclusion of alignment and calibration skims into the Tier-0 processing system. Data distribution via the PhEDEx system performed very well overall. Re-reconstruction at the Tier-1 sites was performed with adequate turn-around time, but showed the need of a system with full accountability, which will be introduced by spring 2010.

Event reconstruction has used various algorithms dedicated to cosmic ray muons, but in addition used CRAFT to commission the methodology for collisions. A comprehensive set of reconstructed objects has been provided to support the analysis of the CRAFT data. The workflow for fast deployment of code corrections presented some organisational challenges, and while solutions were generally available quickly, several improvements for future operation were implemented. Data quality monitoring was performed both at the online and offline levels, and regular DQM shifts were run continuously. Remote CMS centres fully participated in this process. Further certification and validation of the data were performed by prompt feedback groups who analysed the output of the prompt reconstruction, and discovered time-dependent developments which were correlated to intentional changes in the detector conditions.

Essentially all alignment and calibration constants accessible with cosmic ray muon data taking have been determined during CRAFT, thus putting the corresponding framework through a very comprehensive test. The associated organizational challenges with a large number of concurrent workflows, properly respecting the interdependencies, were successfully addressed. Several reprocessing campaigns with successively improved constants have been performed, which provided a very high data-quality sample for cosmic ray analysis. The conditions database, which is a sophisticated network of commercial relational database management servers with proxies and mechanisms to provide distributed access, proved to be a solid basis for all conditions-related operations.

The large sample of cosmic ray data also provided a realistic test of the distributed analysis system. Limitations in job execution efficiency were traced to remote file staging issues, which will be addressed by future improvements in the workload management system. Overall, CRAFT has shown that CMS has highly reliable methods at its disposal to make data samples available with short latency for analysis at remote centres.

In conclusion, CRAFT has demonstrated the proper functioning of the overall CMS workflow machinery to a very high degree. While the challenge has been instrumental in identifying individual areas which need some further improvements, the overall system is well designed and is expected to scale smoothly to data taking with LHC collisions.

Acknowledgments

We thank the technical and administrative staff at CERN and other CMS Institutes, and acknowledge support from: FMSR (Austria); FNRS and FWO (Belgium); CNPq, CAPES, FAPERJ,

2010 JINST 5 T03006

and FAPESP (Brazil); MES (Bulgaria); CERN; CAS, MoST, and NSFC (China); COLCIENCIAS (Colombia); MSES (Croatia); RPF (Cyprus); Academy of Sciences and NICPB (Estonia); Academy of Finland, ME, and HIP (Finland); CEA and CNRS/IN2P3 (France); BMBF, DFG, and HGF (Germany); GSRT (Greece); OTKA and NKTH (Hungary); DAE and DST (India); IPM (Iran); SFI (Ireland); INFN (Italy); NRF (Korea); LAS (Lithuania); CINVESTAV, CONACYT, SEP, and UASLP-FAI (Mexico); PAEC (Pakistan); SCSR (Poland); FCT (Portugal); JINR (Armenia, Belarus, Georgia, Ukraine, Uzbekistan); MST and MAE (Russia); MSTDS (Serbia); MICINN and CPAN (Spain); Swiss Funding Agencies (Switzerland); NSC (Taipei); TUBITAK and TAEK (Turkey); STFC (United Kingdom); DOE and NSF (USA). Individuals have received support from the Marie-Curie IEF program (European Union); the Leventis Foundation; the A. P. Sloan Foundation; and the Alexander von Humboldt Foundation.

References

[1] CMS collaboration, *The CMS experiment at the CERN LHC*, 2008 *JINST* **3** S08004.

[2] L. Evans and P. Bryant eds., *LHC Machine*, 2008 *JINST* **3** S08001.

[3] CMS collaboration, *Commissioning of the CMS experiment and the cosmic run at four tesla*, 2010 *JINST* **5** T03001.

[4] P. Sphicas ed., *CMS: The TriDAS project. Technical design report, Vol. 2: Data acquisition and high-level trigger*, CERN-LHCC-2002-026.

[5] C. Jones et al., "The new CMS event data model and framework", in *Proceedings for Computing in High-Energy Physics (CHEP '06), Mumbai, India*, February 2006.

[6] G. Bauer et al., *The run control and monitoring system of the CMS experiment*, *J. Phys. Conf. Ser.* **119** (2008) 022010 [PoS(ACAT)026].

[7] E. Meschi, *High level trigger configuration and handling of trigger tables in the CMS filter farm*, *J. Phys. Conf. Ser.* **119** (2008) 022011.

[8] B.J. Blumenfeld, D. Dykstra, L. Lueking and E. Wicklund, *CMS conditions data access using FroNTier*, *J. Phys. Conf. Ser.* **119** (2008) 072007.

[9] CMS collaboration, *CMS: The computing project. Technical design report*, CERN-LHCC-2005-023.

[10] *Worldwide LHC Computing Grid (WLCG)*, http://lcg.web.cern.ch/LCG/public/default.htm.

[11] M. Aderholz et al., *Models of networked analysis at regional centres for LHC experiments (MONARC). Phase 2 report*, CERN-LCB-2000-001.

[12] R. Brun and F. Rademakers, *ROOT: an object oriented data analysis framework*, *Nucl. Instrum. Meth.* **A 389** (1997) 81;
see also http://root.cern.ch.

[13] D. Mason, *Remote Operation of the global CMS Data and Workflows*, talk given at the *Computing in High-Energy Physics Conference (CHEP '09)*, Prague, Czech Republic, March 2009.

[14] *CERN Batch Services (LSF)*, http://batch.web.cern.ch/batch.

[15] *CERN Advanced STORage Manager 2 (CASTOR2)*, http://castor.web.cern.ch/castor/.

[16] S. Wakefield et al., *Large Scale Job Management and Experience in Recent Data Challenges within the LHC CMS experiment*, in *Proceedings for XII Advanced Computing and Analysis Techniques in Physics Research*, Erice, Italy, November 2008.

2010 JINST 5 T03006

[17] R. Egeland et al., *Data transfer infrastructure for CMS data taking*, in *Proceedings for XII Advanced Computing and Analysis Techniques in Physics Research*, Erice, Italy, November 2008.

[18] *The gLite File Transfer Service*, http://egee-jra1-dm.web.cern.ch/egee-jra1-dm/FTS/.

[19] *Storage Resource Management (SRM) Working Group*, https://sdm.lbl.gov/srm-wg/.

[20] *Python Programming Language*, http://www.python.org.

[21] *MySQL*, http://www.mysql.com.

[22] *Enabling Grids for E-sciencE (EGEE)*, http://www.eu-egee.org.

[23] *Nordugrid*, http://www.nordugrid.org.

[24] *Open Science Grid*, http://www.opensciencegrid.org.

[25] CMS collaboration, *Time reconstruction and performance of the CMS electromagnetic calorimeter*, 2010 *JINST* **5** T03011.

[26] D. Benedetti et al., *Tracking and Alignment with the Silicon Strip Tracker at the CMS Magnet Test Cosmic Challenge*, CMS-NOTE-2007-030 (2007), http://cms.cern.ch/iCMS/jsp/openfile.jsp?type=NOTE&year=2007&files=NOTE2007_030.pdf.

[27] T. Christiansen, *The CMS magnet test and cosmic challenge*, `arXiv:0805.1882`.

[28] W. Adams et al., *Track Reconstruction with Cosmic Ray Data at the Tracker Integration Facility*, CMS-NOTE-2009-003 (2009), http://cms.cern.ch/iCMS/jsp/openfile.jsp?type=NOTE&year=2009&files=NOTE2009_003.pdf.

[29] CMS collaboration, *Alignment of the CMS silicon tracker during commissioning with cosmic rays*, 2010 *JINST* **5** T03009.

[30] CMS collaboration, *Performance of CMS muon reconstruction in cosmic-ray events*, 2010 *JINST* **5** T03022.

[31] L. Tuura et al., *CMS data quality monitoring: systems and experiences*, in *Proceedings for Computing in High-Energy Physics (CHEP '09)*, Prague, Czech Republic, March 2009.

[32] L. Tuura et al., *CMS data quality monitoring web service*, in *Proceedings for Computing in High-Energy Physics (CHEP '09)*, Prague, Czech Republic, March 2009.

[33] G. Bauer et al., *The Run Control System of the CMS Experiment*, in *Proceedings for Computing in High-Energy Physics (CHEP '07)*, Victoria B.C., Canada, September 2007.

[34] W. Badgett et al., *CMS Online Web-Based Monitoring and Remote Operations*, in *Proceedings for Computing in High-Energy Physics (CHEP '07)*, Victoria B.C., Canada, September 2007.

[35] A. Afaq et al., *The CMS dataset bookkeeping service*, *J. Phys. Conf. Ser.* **119** (2008) 072001.

[36] E. Gottschalk et al., *CMS Centres Worldwide: a New Collaborative Infrastructure*, in *Proceedings for Computing in High-Energy Physics (CHEP '09)*, Prague, Czech Republic, March 2009.

[37] E. Gottschalk et al., "Collaborating at a Distance: Operations Centres, Tools, and Trends", in *Proceedings for Computing in High-Energy Physics (CHEP '09)*, Prague, Czech Republic, March 2009.

[38] P. Kreuzer et al., *Building and Commissioning of the CMS CERN Analysis Facility (CAF)*, in *Proceedings for Computing in High-Energy Physics (CHEP '09)*, Prague, Czech Republic, March 2009.

[39] D. Futyan et al., "The CMS Computing, Software and Analysis Challenge", in *Proceedings for Computing in High-Energy Physics (CHEP '09)*, Prague, Czech Republic, March 2009.

2010 JINST 5 T03006

[40] CMS collaboration, *Commissioning of the CMS High-Level Trigger with cosmic rays*, 2010 *JINST* **5** T03005.

[41] CMS collaboration, *Alignment of the CMS muon system with cosmic-ray and beam-halo muons*, 2010 *JINST* **5** T03020.

[42] CMS collaboration, *Aligning the CMS muon chambers with the muon alignment system during an extended cosmic ray run*, 2010 *JINST* **5** T03019.

[43] CMS collaboration, *Calibration of the CMS drift tube chambers and measurement of the drift velocity with cosmic rays*, 2010 *JINST* **5** T03016.

[44] CMS collaboration, *Performance and operation of the CMS electromagnetic calorimeter*, 2010 *JINST* **5** T03010.

[45] M. Gonzalez-Berges, *The joint controls project framework*, `physics/0305128`.

[46] Z. Xie et al., *Pool persistency framework for LHC: New developments and CMS applications*, in *Proceedings for 4th International Workshop on Frontier Science*, Milan Biococca, Italy, September 2005.

[47] R. Urbano, *Oracle Database 2 Day + Data Replication and Integration Guide, 11g*, Oracle, release 1 (11.1) edition (2008).

[48] M. De Gruttola et al., *First experience in operating the population of the condition database of the CMS experiment*, in *Proceedings for Computing in High-Energy Physics (CHEP '09)*, Prague, Czech Republic, March 2009.

[49] D. Spiga et al., *The CMS Remote Analysis Builder (CRAB)*, *Lect. Notes Comput. Sci.* **4873** (2007) 580.

2010 JINST 5 T03006

The CMS collaboration

Yerevan Physics Institute, Yerevan, Armenia
S. Chatrchyan, V. Khachatryan, A.M. Sirunyan

Institut für Hochenergiephysik der OeAW, Wien, Austria
W. Adam, B. Arnold, H. Bergauer, T. Bergauer, M. Dragicevic, M. Eichberger, J. Erö, M. Friedl, R. Frühwirth, V.M. Ghete, J. Hammer[1], S. Hänsel, M. Hoch, N. Hörmann, J. Hrubec, M. Jeitler, G. Kasieczka, K. Kastner, M. Krammer, D. Liko, I. Magrans de Abril, I. Mikulec, F. Mittermayr, B. Neuherz, M. Oberegger, M. Padrta, M. Pernicka, H. Rohringer, S. Schmid, R. Schöfbeck, T. Schreiner, R. Stark, H. Steininger, J. Strauss, A. Taurok, F. Teischinger, T. Themel, D. Uhl, P. Wagner, W. Waltenberger, G. Walzel, E. Widl, C.-E. Wulz

National Centre for Particle and High Energy Physics, Minsk, Belarus
V. Chekhovsky, O. Dvornikov, I. Emeliantchik, A. Litomin, V. Makarenko, I. Marfin, V. Mossolov, N. Shumeiko, A. Solin, R. Stefanovitch, J. Suarez Gonzalez, A. Tikhonov

Research Institute for Nuclear Problems, Minsk, Belarus
A. Fedorov, A. Karneyeu, M. Korzhik, V. Panov, R. Zuyeuski

Research Institute of Applied Physical Problems, Minsk, Belarus
P. Kuchinsky

Universiteit Antwerpen, Antwerpen, Belgium
W. Beaumont, L. Benucci, M. Cardaci, E.A. De Wolf, E. Delmeire, D. Druzhkin, M. Hashemi, X. Janssen, T. Maes, L. Mucibello, S. Ochesanu, R. Rougny, M. Selvaggi, H. Van Haevermaet, P. Van Mechelen, N. Van Remortel

Vrije Universiteit Brussel, Brussel, Belgium
V. Adler, S. Beauceron, S. Blyweert, J. D'Hondt, S. De Weirdt, O. Devroede, J. Heyninck, A. Kalogeropoulos, J. Maes, M. Maes, M.U. Mozer, S. Tavernier, W. Van Doninck[1], P. Van Mulders, I. Villella

Université Libre de Bruxelles, Bruxelles, Belgium
O. Bouhali, E.C. Chabert, O. Charaf, B. Clerbaux, G. De Lentdecker, V. Dero, S. Elgammal, A.P.R. Gay, G.H. Hammad, P.E. Marage, S. Rugovac, C. Vander Velde, P. Vanlaer, J. Wickens

Ghent University, Ghent, Belgium
M. Grunewald, B. Klein, A. Marinov, D. Ryckbosch, F. Thyssen, M. Tytgat, L. Vanelderen, P. Verwilligen

Université Catholique de Louvain, Louvain-la-Neuve, Belgium
S. Basegmez, G. Bruno, J. Caudron, C. Delaere, P. Demin, D. Favart, A. Giammanco, G. Grégoire, V. Lemaitre, O. Militaru, S. Ovyn, K. Piotrzkowski[1], L. Quertenmont, N. Schul

Université de Mons, Mons, Belgium
N. Beliy, E. Daubie

Centro Brasileiro de Pesquisas Fisicas, Rio de Janeiro, Brazil
G.A. Alves, M.E. Pol, M.H.G. Souza

2010 JINST 5 T03006

Universidade do Estado do Rio de Janeiro, Rio de Janeiro, Brazil
W. Carvalho, D. De Jesus Damiao, C. De Oliveira Martins, S. Fonseca De Souza, L. Mundim, V. Oguri, A. Santoro, S.M. Silva Do Amaral, A. Sznajder

Instituto de Fisica Teorica, Universidade Estadual Paulista, Sao Paulo, Brazil
T.R. Fernandez Perez Tomei, M.A. Ferreira Dias, E. M. Gregores[2], S.F. Novaes

Institute for Nuclear Research and Nuclear Energy, Sofia, Bulgaria
K. Abadjiev[1], T. Anguelov, J. Damgov, N. Darmenov[1], L. Dimitrov, V. Genchev[1], P. Iaydjiev, S. Piperov, S. Stoykova, G. Sultanov, R. Trayanov, I. Vankov

University of Sofia, Sofia, Bulgaria
A. Dimitrov, M. Dyulendarova, V. Kozhuharov, L. Litov, E. Marinova, M. Mateev, B. Pavlov, P. Petkov, Z. Toteva[1]

Institute of High Energy Physics, Beijing, China
G.M. Chen, H.S. Chen, W. Guan, C.H. Jiang, D. Liang, B. Liu, X. Meng, J. Tao, J. Wang, Z. Wang, Z. Xue, Z. Zhang

State Key Lab. of Nucl. Phys. and Tech., Peking University, Beijing, China
Y. Ban, J. Cai, Y. Ge, S. Guo, Z. Hu, Y. Mao, S.J. Qian, H. Teng, B. Zhu

Universidad de Los Andes, Bogota, Colombia
C. Avila, M. Baquero Ruiz, C.A. Carrillo Montoya, A. Gomez, B. Gomez Moreno, A.A. Ocampo Rios, A.F. Osorio Oliveros, D. Reyes Romero, J.C. Sanabria

Technical University of Split, Split, Croatia
N. Godinovic, K. Lelas, R. Plestina, D. Polic, I. Puljak

University of Split, Split, Croatia
Z. Antunovic, M. Dzelalija

Institute Rudjer Boskovic, Zagreb, Croatia
V. Brigljevic, S. Duric, K. Kadija, S. Morovic

University of Cyprus, Nicosia, Cyprus
R. Fereos, M. Galanti, J. Mousa, A. Papadakis, F. Ptochos, P.A. Razis, D. Tsiakkouri, Z. Zinonos

National Institute of Chemical Physics and Biophysics, Tallinn, Estonia
A. Hektor, M. Kadastik, K. Kannike, M. Müntel, M. Raidal, L. Rebane

Helsinki Institute of Physics, Helsinki, Finland
E. Anttila, S. Czellar, J. Härkönen, A. Heikkinen, V. Karimäki, R. Kinnunen, J. Klem, M.J. Kortelainen, T. Lampén, K. Lassila-Perini, S. Lehti, T. Lindén, P. Luukka, T. Mäenpää, J. Nysten, E. Tuominen, J. Tuominiemi, D. Ungaro, L. Wendland

Lappeenranta University of Technology, Lappeenranta, Finland
K. Banzuzi, A. Korpela, T. Tuuva

Laboratoire d'Annecy-le-Vieux de Physique des Particules, IN2P3-CNRS, Annecy-le-Vieux, France
P. Nedelec, D. Sillou

2010 JINST 5 T03006

DSM/IRFU, CEA/Saclay, Gif-sur-Yvette, France
M. Besancon, R. Chipaux, M. Dejardin, D. Denegri, J. Descamps, B. Fabbro, J.L. Faure, F. Ferri, S. Ganjour, F.X. Gentit, A. Givernaud, P. Gras, G. Hamel de Monchenault, P. Jarry, M.C. Lemaire, E. Locci, J. Malcles, M. Marionneau, L. Millischer, J. Rander, A. Rosowsky, D. Rousseau, M. Titov, P. Verrecchia

Laboratoire Leprince-Ringuet, Ecole Polytechnique, IN2P3-CNRS, Palaiseau, France
S. Baffioni, L. Bianchini, M. Bluj[3], P. Busson, C. Charlot, L. Dobrzynski, R. Granier de Cassagnac, M. Haguenauer, P. Miné, P. Paganini, Y. Sirois, C. Thiebaux, A. Zabi

Institut Pluridisciplinaire Hubert Curien, Université de Strasbourg, Université de Haute Alsace Mulhouse, CNRS/IN2P3, Strasbourg, France
J.-L. Agram[4], A. Besson, D. Bloch, D. Bodin, J.-M. Brom, E. Conte[4], F. Drouhin[4], J.-C. Fontaine[4], D. Gelé, U. Goerlach, L. Gross, P. Juillot, A.-C. Le Bihan, Y. Patois, J. Speck, P. Van Hove

Université de Lyon, Université Claude Bernard Lyon 1, CNRS-IN2P3, Institut de Physique Nucléaire de Lyon, Villeurbanne, France
C. Baty, M. Bedjidian, J. Blaha, G. Boudoul, H. Brun, N. Chanon, R. Chierici, D. Contardo, P. Depasse, T. Dupasquier, H. El Mamouni, F. Fassi[5], J. Fay, S. Gascon, B. Ille, T. Kurca, T. Le Grand, M. Lethuillier, N. Lumb, L. Mirabito, S. Perries, M. Vander Donckt, P. Verdier

E. Andronikashvili Institute of Physics, Academy of Science, Tbilisi, Georgia
N. Djaoshvili, N. Roinishvili, V. Roinishvili

Institute of High Energy Physics and Informatization, Tbilisi State University, Tbilisi, Georgia
N. Amaglobeli

RWTH Aachen University, I. Physikalisches Institut, Aachen, Germany
R. Adolphi, G. Anagnostou, R. Brauer, W. Braunschweig, M. Edelhoff, H. Esser, L. Feld, W. Karpinski, A. Khomich, K. Klein, N. Mohr, A. Ostaptchouk, D. Pandoulas, G. Pierschel, F. Raupach, S. Schael, A. Schultz von Dratzig, G. Schwering, D. Sprenger, M. Thomas, M. Weber, B. Wittmer, M. Wlochal

RWTH Aachen University, III. Physikalisches Institut A, Aachen, Germany
O. Actis, G. Altenhöfer, W. Bender, P. Biallass, M. Erdmann, G. Fetchenhauer[1], J. Frangenheim, T. Hebbeker, G. Hilgers, A. Hinzmann, K. Hoepfner, C. Hof, M. Kirsch, T. Klimkovich, P. Kreuzer[1], D. Lanske[†], M. Merschmeyer, A. Meyer, B. Philipps, H. Pieta, H. Reithler, S.A. Schmitz, L. Sonnenschein, M. Sowa, J. Steggemann, H. Szczesny, D. Teyssier, C. Zeidler

RWTH Aachen University, III. Physikalisches Institut B, Aachen, Germany
M. Bontenackels, M. Davids, M. Duda, G. Flügge, H. Geenen, M. Giffels, W. Haj Ahmad, T. Hermanns, D. Heydhausen, S. Kalinin, T. Kress, A. Linn, A. Nowack, L. Perchalla, M. Poettgens, O. Pooth, P. Sauerland, A. Stahl, D. Tornier, M.H. Zoeller

Deutsches Elektronen-Synchrotron, Hamburg, Germany
M. Aldaya Martin, U. Behrens, K. Borras, A. Campbell, E. Castro, D. Dammann, G. Eckerlin, A. Flossdorf, G. Flucke, A. Geiser, D. Hatton, J. Hauk, H. Jung, M. Kasemann, I. Katkov, C. Kleinwort, H. Kluge, A. Knutsson, E. Kuznetsova, W. Lange, W. Lohmann, R. Mankel[1],

2010 JINST 5 T03006

M. Marienfeld, A.B. Meyer, S. Miglioranzi, J. Mnich, M. Ohlerich, J. Olzem, A. Parenti, C. Rosemann, R. Schmidt, T. Schoerner-Sadenius, D. Volyanskyy, C. Wissing, W.D. Zeuner[1]

University of Hamburg, Hamburg, Germany
C. Autermann, F. Bechtel, J. Draeger, D. Eckstein, U. Gebbert, K. Kaschube, G. Kaussen, R. Klanner, B. Mura, S. Naumann-Emme, F. Nowak, U. Pein, C. Sander, P. Schleper, T. Schum, H. Stadie, G. Steinbrück, J. Thomsen, R. Wolf

Institut für Experimentelle Kernphysik, Karlsruhe, Germany
J. Bauer, P. Blüm, V. Buege, A. Cakir, T. Chwalek, W. De Boer, A. Dierlamm, G. Dirkes, M. Feindt, U. Felzmann, M. Frey, A. Furgeri, J. Gruschke, C. Hackstein, F. Hartmann[1], S. Heier, M. Heinrich, H. Held, D. Hirschbuehl, K.H. Hoffmann, S. Honc, C. Jung, T. Kuhr, T. Liamsuwan, D. Martschei, S. Mueller, Th. Müller, M.B. Neuland, M. Niegel, O. Oberst, A. Oehler, J. Ott, T. Peiffer, D. Piparo, G. Quast, K. Rabbertz, F. Ratnikov, N. Ratnikova, M. Renz, C. Saout[1], G. Sartisohn, A. Scheurer, P. Schieferdecker, F.-P. Schilling, G. Schott, H.J. Simonis, F.M. Stober, P. Sturm, D. Troendle, A. Trunov, W. Wagner, J. Wagner-Kuhr, M. Zeise, V. Zhukov[6], E.B. Ziebarth

Institute of Nuclear Physics "Demokritos", Aghia Paraskevi, Greece
G. Daskalakis, T. Geralis, K. Karafasoulis, A. Kyriakis, D. Loukas, A. Markou, C. Markou, C. Mavrommatis, E. Petrakou, A. Zachariadou

University of Athens, Athens, Greece
L. Gouskos, P. Katsas, A. Panagiotou[1]

University of Ioánnina, Ioánnina, Greece
I. Evangelou, P. Kokkas, N. Manthos, I. Papadopoulos, V. Patras, F.A. Triantis

KFKI Research Institute for Particle and Nuclear Physics, Budapest, Hungary
G. Bencze[1], L. Boldizsar, G. Debreczeni, C. Hajdu[1], S. Hernath, P. Hidas, D. Horvath[7], K. Krajczar, A. Laszlo, G. Patay, F. Sikler, N. Toth, G. Vesztergombi

Institute of Nuclear Research ATOMKI, Debrecen, Hungary
N. Beni, G. Christian, J. Imrek, J. Molnar, D. Novak, J. Palinkas, G. Szekely, Z. Szillasi[1], K. Tokesi, V. Veszpremi

University of Debrecen, Debrecen, Hungary
A. Kapusi, G. Marian, P. Raics, Z. Szabo, Z.L. Trocsanyi, B. Ujvari, G. Zilizi

Panjab University, Chandigarh, India
S. Bansal, H.S. Bawa, S.B. Beri, V. Bhatnagar, M. Jindal, M. Kaur, R. Kaur, J.M. Kohli, M.Z. Mehta, N. Nishu, L.K. Saini, A. Sharma, A. Singh, J.B. Singh, S.P. Singh

University of Delhi, Delhi, India
S. Ahuja, S. Arora, S. Bhattacharya[8], S. Chauhan, B.C. Choudhary, P. Gupta, S. Jain, S. Jain, M. Jha, A. Kumar, K. Ranjan, R.K. Shivpuri, A.K. Srivastava

Bhabha Atomic Research Centre, Mumbai, India
R.K. Choudhury, D. Dutta, S. Kailas, S.K. Kataria, A.K. Mohanty, L.M. Pant, P. Shukla, A. Topkar

Tata Institute of Fundamental Research - EHEP, Mumbai, India
T. Aziz, M. Guchait[9], A. Gurtu, M. Maity[10], D. Majumder, G. Majumder, K. Mazumdar, A. Nayak, A. Saha, K. Sudhakar

2010 JINST 5 T03006

Tata Institute of Fundamental Research - HECR, Mumbai, India
S. Banerjee, S. Dugad, N.K. Mondal

Institute for Studies in Theoretical Physics & Mathematics (IPM), Tehran, Iran
H. Arfaei, H. Bakhshiansohi, A. Fahim, A. Jafari, M. Mohammadi Najafabadi, A. Moshaii, S. Paktinat Mehdiabadi, S. Rouhani, B. Safarzadeh, M. Zeinali

University College Dublin, Dublin, Ireland
M. Felcini

INFN Sezione di Bari [a], Università di Bari [b], Politecnico di Bari [c], Bari, Italy
M. Abbrescia[a,b], L. Barbone[a], F. Chiumarulo[a], A. Clemente[a], A. Colaleo[a], D. Creanza[a,c], G. Cuscela[a], N. De Filippis[a], M. De Palma[a,b], G. De Robertis[a], G. Donvito[a], F. Fedele[a], L. Fiore[a], M. Franco[a], G. Iaselli[a,c], N. Lacalamita[a], F. Loddo[a], L. Lusito[a,b], G. Maggi[a,c], M. Maggi[a], N. Manna[a,b], B. Marangelli[a,b], S. My[a,c], S. Natali[a,b], S. Nuzzo[a,b], G. Papagni[a], S. Piccolomo[a], G.A. Pierro[a], C. Pinto[a], A. Pompili[a,b], G. Pugliese[a,c], R. Rajan[a], A. Ranieri[a], F. Romano[a,c], G. Roselli[a,b], G. Selvaggi[a,b], Y. Shinde[a], L. Silvestris[a], S. Tupputi[a,b], G. Zito[a]

INFN Sezione di Bologna [a], Universita di Bologna [b], Bologna, Italy
G. Abbiendi[a], W. Bacchi[a,b], A.C. Benvenuti[a], M. Boldini[a], D. Bonacorsi[a], S. Braibant-Giacomelli[a,b], V.D. Cafaro[a], S.S. Caiazza[a], P. Capiluppi[a,b], A. Castro[a,b], F.R. Cavallo[a], G. Codispoti[a,b], M. Cuffiani[a,b], I. D'Antone[a], G.M. Dallavalle[a,1], F. Fabbri[a], A. Fanfani[a,b], D. Fasanella[a], P. Giacomelli[a], V. Giordano[a], M. Giunta[a,1], C. Grandi[a], M. Guerzoni[a], S. Marcellini[a], G. Masetti[a,b], A. Montanari[a], F.L. Navarria[a,b], F. Odorici[a], G. Pellegrini[a], A. Perrotta[a], A.M. Rossi[a,b], T. Rovelli[a,b], G. Siroli[a,b], G. Torromeo[a], R. Travaglini[a,b]

INFN Sezione di Catania [a], Universita di Catania [b], Catania, Italy
S. Albergo[a,b], S. Costa[a,b], R. Potenza[a,b], A. Tricomi[a,b], C. Tuve[a]

INFN Sezione di Firenze [a], Universita di Firenze [b], Firenze, Italy
G. Barbagli[a], G. Broccolo[a,b], V. Ciulli[a,b], C. Civinini[a], R. D'Alessandro[a,b], E. Focardi[a,b], S. Frosali[a,b], E. Gallo[a], C. Genta[a,b], G. Landi[a,b], P. Lenzi[a,b,1], M. Meschini[a], S. Paoletti[a], G. Sguazzoni[a], A. Tropiano[a]

INFN Laboratori Nazionali di Frascati, Frascati, Italy
L. Benussi, M. Bertani, S. Bianco, S. Colafranceschi[11], D. Colonna[11], F. Fabbri, M. Giardoni, L. Passamonti, D. Piccolo, D. Pierluigi, B. Ponzio, A. Russo

INFN Sezione di Genova, Genova, Italy
P. Fabbricatore, R. Musenich

INFN Sezione di Milano-Biccoca [a], Universita di Milano-Bicocca [b], Milano, Italy
A. Benaglia[a], M. Calloni[a], G.B. Cerati[a,b,1], P. D'Angelo[a], F. De Guio[a], F.M. Farina[a], A. Ghezzi[a], P. Govoni[a,b], M. Malberti[a,b,1], S. Malvezzi[a], A. Martelli[a], D. Menasce[a], V. Miccio[a,b], L. Moroni[a], P. Negri[a,b], M. Paganoni[a,b], D. Pedrini[a], A. Pullia[a,b], S. Ragazzi[a,b], N. Redaelli[a], S. Sala[a], R. Salerno[a,b], T. Tabarelli de Fatis[a,b], V. Tancini[a,b], S. Taroni[a,b]

INFN Sezione di Napoli [a], Universita di Napoli "Federico II" [b], Napoli, Italy
S. Buontempo[a], N. Cavallo[a], A. Cimmino[a,b,1], M. De Gruttola[a,b,1], F. Fabozzi[a,12], A.O.M. Iorio[a], L. Lista[a], D. Lomidze[a], P. Noli[a,b], P. Paolucci[a], C. Sciacca[a,b]

2010 JINST 5 T03006

INFN Sezione di Padova [a], Università di Padova [b], Padova, Italy
P. Azzi[a,1], N. Bacchetta[a], L. Barcellan[a], P. Bellan[a,b,1], M. Bellato[a], M. Benettoni[a], M. Biasotto[a,13], D. Bisello[a,b], E. Borsato[a,b], A. Branca[a], R. Carlin[a,b], L. Castellani[a], P. Checchia[a], E. Conti[a], F. Dal Corso[a], M. De Mattia[a,b], T. Dorigo[a], U. Dosselli[a], F. Fanzago[a], F. Gasparini[a,b], U. Gasparini[a,b], P. Giubilato[a,b], F. Gonella[a], A. Gresele[a,14], M. Gulmini[a,13], A. Kaminskiy[a,b], S. Lacaprara[a,13], I. Lazzizzera[a,14], M. Margoni[a,b], G. Maron[a,13], S. Mattiazzo[a,b], M. Mazzucato[a], M. Meneghelli[a], A.T. Meneguzzo[a,b], M. Michelotto[a], F. Montecassiano[a], M. Nespolo[a], M. Passaseo[a], M. Pegoraro[a], L. Perrozzi[a], N. Pozzobon[a,b], P. Ronchese[a,b], F. Simonetto[a,b], N. Toniolo[a], E. Torassa[a], M. Tosi[a,b], A. Triossi[a], S. Vanini[a,b], S. Ventura[a], P. Zotto[a,b], G. Zumerle[a,b]

INFN Sezione di Pavia [a], Universita di Pavia [b], Pavia, Italy
P. Baesso[a,b], U. Berzano[a], S. Bricola[a], M.M. Necchi[a,b], D. Pagano[a,b], S.P. Ratti[a,b], C. Riccardi[a,b], P. Torre[a,b], A. Vicini[a], P. Vitulo[a,b], C. Viviani[a,b]

INFN Sezione di Perugia [a], Universita di Perugia [b], Perugia, Italy
D. Aisa[a], S. Aisa[a], E. Babucci[a], M. Biasini[a,b], G.M. Bilei[a], B. Caponeri[a,b], B. Checcucci[a], N. Dinu[a], L. Fanò[a], L. Farnesini[a], P. Lariccia[a,b], A. Lucaroni[a,b], G. Mantovani[a,b], A. Nappi[a,b], A. Piluso[a], V. Postolache[a], A. Santocchia[a,b], L. Servoli[a], D. Tonoiu[a], A. Vedaee[a], R. Volpe[a,b]

INFN Sezione di Pisa [a], Universita di Pisa [b], Scuola Normale Superiore di Pisa [c], Pisa, Italy
P. Azzurri[a,c], G. Bagliesi[a], J. Bernardini[a,b], L. Berretta[a], T. Boccali[a], A. Bocci[a,c], L. Borrello[a,c], F. Bosi[a], F. Calzolari[a], R. Castaldi[a], R. Dell'Orso[a], F. Fiori[a,b], L. Foà[a,c], S. Gennai[a,c], A. Giassi[a], A. Kraan[a], F. Ligabue[a,c], T. Lomtadze[a], F. Mariani[a], L. Martini[a], M. Massa[a], A. Messineo[a,b], A. Moggi[a], F. Palla[a], F. Palmonari[a], G. Petragnani[a], G. Petrucciani[a,c], F. Raffaelli[a], S. Sarkar[a], G. Segneri[a], A.T. Serban[a], P. Spagnolo[a,1], R. Tenchini[a,1], S. Tolaini[a], G. Tonelli[a,b,1], A. Venturi[a], P.G. Verdini[a]

INFN Sezione di Roma [a], Universita di Roma "La Sapienza" [b], Roma, Italy
S. Baccaro[a,15], L. Barone[a,b], A. Bartoloni[a], F. Cavallari[a,1], I. Dafinei[a], D. Del Re[a,b], E. Di Marco[a,b], M. Diemoz[a], D. Franci[a,b], E. Longo[a,b], G. Organtini[a,b], A. Palma[a,b], F. Pandolfi[a,b], R. Paramatti[a,1], F. Pellegrino[a], S. Rahatlou[a,b], C. Rovelli[a]

INFN Sezione di Torino [a], Università di Torino [b], Università del Piemonte Orientale (Novara) [c], Torino, Italy
G. Alampi[a], N. Amapane[a,b], R. Arcidiacono[a,b], S. Argiro[a,b], M. Arneodo[a,c], C. Biino[a], M.A. Borgia[a,b], C. Botta[a,b], N. Cartiglia[a], R. Castello[a,b], G. Cerminara[a,b], M. Costa[a,b], D. Dattola[a], G. Dellacasa[a], N. Demaria[a], G. Dughera[a], F. Dumitrache[a], A. Graziano[a,b], C. Mariotti[a], M. Marone[a,b], S. Maselli[a], E. Migliore[a,b], G. Mila[a,b], V. Monaco[a,b], M. Musich[a,b], M. Nervo[a,b], M.M. Obertino[a,c], S. Oggero[a,b], R. Panero[a], N. Pastrone[a], M. Pelliccioni[a,b], A. Romero[a,b], M. Ruspa[a,c], R. Sacchi[a,b], A. Solano[a,b], A. Staiano[a], P.P. Trapani[a,b,1], D. Trocino[a,b], A. Vilela Pereira[a,b], L. Visca[a,b], A. Zampieri[a]

INFN Sezione di Trieste [a], Universita di Trieste [b], Trieste, Italy
F. Ambroglini[a,b], S. Belforte[a], F. Cossutti[a], G. Della Ricca[a,b], B. Gobbo[a], A. Penzo[a]

Kyungpook National University, Daegu, Korea
S. Chang, J. Chung, D.H. Kim, G.N. Kim, D.J. Kong, H. Park, D.C. Son

2010 JINST 5 T03006

Wonkwang University, Iksan, Korea
S.Y. Bahk

Chonnam National University, Kwangju, Korea
S. Song

Konkuk University, Seoul, Korea
S.Y. Jung

Korea University, Seoul, Korea
B. Hong, H. Kim, J.H. Kim, K.S. Lee, D.H. Moon, S.K. Park, H.B. Rhee, K.S. Sim

Seoul National University, Seoul, Korea
J. Kim

University of Seoul, Seoul, Korea
M. Choi, G. Hahn, I.C. Park

Sungkyunkwan University, Suwon, Korea
S. Choi, Y. Choi, J. Goh, H. Jeong, T.J. Kim, J. Lee, S. Lee

Vilnius University, Vilnius, Lithuania
M. Janulis, D. Martisiute, P. Petrov, T. Sabonis

Centro de Investigacion y de Estudios Avanzados del IPN, Mexico City, Mexico
H. Castilla Valdez[1], A. Sánchez Hernández

Universidad Iberoamericana, Mexico City, Mexico
S. Carrillo Moreno

Universidad Autónoma de San Luis Potosí, San Luis Potosí, Mexico
A. Morelos Pineda

University of Auckland, Auckland, New Zealand
P. Allfrey, R.N.C. Gray, D. Krofcheck

University of Canterbury, Christchurch, New Zealand
N. Bernardino Rodrigues, P.H. Butler, T. Signal, J.C. Williams

National Centre for Physics, Quaid-I-Azam University, Islamabad, Pakistan
M. Ahmad, I. Ahmed, W. Ahmed, M.I. Asghar, M.I.M. Awan, H.R. Hoorani, I. Hussain, W.A. Khan, T. Khurshid, S. Muhammad, S. Qazi, H. Shahzad

Institute of Experimental Physics, Warsaw, Poland
M. Cwiok, R. Dabrowski, W. Dominik, K. Doroba, M. Konecki, J. Krolikowski, K. Pozniak[16], R. Romaniuk, W. Zabolotny[16], P. Zych

Soltan Institute for Nuclear Studies, Warsaw, Poland
T. Frueboes, R. Gokieli, L. Goscilo, M. Górski, M. Kazana, K. Nawrocki, M. Szleper, G. Wrochna, P. Zalewski

Laboratório de Instrumentação e Física Experimental de Partículas, Lisboa, Portugal
N. Almeida, L. Antunes Pedro, P. Bargassa, A. David, P. Faccioli, P.G. Ferreira Parracho, M. Freitas Ferreira, M. Gallinaro, M. Guerra Jordao, P. Martins, G. Mini, P. Musella, J. Pela, L. Raposo, P.Q. Ribeiro, S. Sampaio, J. Seixas, J. Silva, P. Silva, D. Soares, M. Sousa, J. Varela, H.K. Wöhri

2010 JINST 5 T03006

Joint Institute for Nuclear Research, Dubna, Russia
I. Altsybeev, I. Belotelov, P. Bunin, Y. Ershov, I. Filozova, M. Finger, M. Finger Jr., A. Golunov, I. Golutvin, N. Gorbounov, V. Kalagin, A. Kamenev, V. Karjavin, V. Konoplyanikov, V. Korenkov, G. Kozlov, A. Kurenkov, A. Lanev, A. Makankin, V.V. Mitsyn, P. Moisenz, E. Nikonov, D. Oleynik, V. Palichik, V. Perelygin, A. Petrosyan, R. Semenov, S. Shmatov, V. Smirnov, D. Smolin, E. Tikhonenko, S. Vasil'ev, A. Vishnevskiy, A. Volodko, A. Zarubin, V. Zhiltsov

Petersburg Nuclear Physics Institute, Gatchina (St Petersburg), Russia
N. Bondar, L. Chtchipounov, A. Denisov, Y. Gavrikov, G. Gavrilov, V. Golovtsov, Y. Ivanov, V. Kim, V. Kozlov, P. Levchenko, G. Obrant, E. Orishchin, A. Petrunin, Y. Shcheglov, A. Shchetkovskiy, V. Sknar, I. Smirnov, V. Sulimov, V. Tarakanov, L. Uvarov, S. Vavilov, G. Velichko, S. Volkov, A. Vorobyev

Institute for Nuclear Research, Moscow, Russia
Yu. Andreev, A. Anisimov, P. Antipov, A. Dermenev, S. Gninenko, N. Golubev, M. Kirsanov, N. Krasnikov, V. Matveev, A. Pashenkov, V.E. Postoev, A. Solovey, A. Solovey, A. Toropin, S. Troitsky

Institute for Theoretical and Experimental Physics, Moscow, Russia
A. Baud, V. Epshteyn, V. Gavrilov, N. Ilina, V. Kaftanov[†], V. Kolosov, M. Kossov[1], A. Krokhotin, S. Kuleshov, A. Oulianov, G. Safronov, S. Semenov, I. Shreyber, V. Stolin, E. Vlasov, A. Zhokin

Moscow State University, Moscow, Russia
E. Boos, M. Dubinin[17], L. Dudko, A. Ershov, A. Gribushin, V. Klyukhin, O. Kodolova, I. Lokhtin, S. Petrushanko, L. Sarycheva, V. Savrin, A. Snigirev, I. Vardanyan

P.N. Lebedev Physical Institute, Moscow, Russia
I. Dremin, M. Kirakosyan, N. Konovalova, S.V. Rusakov, A. Vinogradov

State Research Center of Russian Federation, Institute for High Energy Physics, Protvino, Russia
S. Akimenko, A. Artamonov, I. Azhgirey, S. Bitioukov, V. Burtovoy, V. Grishin[1], V. Kachanov, D. Konstantinov, V. Krychkine, A. Levine, I. Lobov, V. Lukanin, Y. Mel'nik, V. Petrov, R. Ryutin, S. Slabospitsky, A. Sobol, A. Sytine, L. Tourtchanovitch, S. Troshin, N. Tyurin, A. Uzunian, A. Volkov

Vinca Institute of Nuclear Sciences, Belgrade, Serbia
P. Adzic, M. Djordjevic, D. Jovanovic[18], D. Krpic[18], D. Maletic, J. Puzovic[18], N. Smiljkovic

Centro de Investigaciones Energéticas Medioambientales y Tecnológicas (CIEMAT), Madrid, Spain
M. Aguilar-Benitez, J. Alberdi, J. Alcaraz Maestre, P. Arce, J.M. Barcala, C. Battilana, C. Burgos Lazaro, J. Caballero Bejar, E. Calvo, M. Cardenas Montes, M. Cepeda, M. Cerrada, M. Chamizo Llatas, F. Clemente, N. Colino, M. Daniel, B. De La Cruz, A. Delgado Peris, C. Diez Pardos, C. Fernandez Bedoya, J.P. Fernández Ramos, A. Ferrando, J. Flix, M.C. Fouz, P. Garcia-Abia, A.C. Garcia-Bonilla, O. Gonzalez Lopez, S. Goy Lopez, J.M. Hernandez, M.I. Josa, J. Marin, G. Merino, J. Molina, A. Molinero, J.J. Navarrete, J.C. Oller, J. Puerta Pelayo, L. Romero, J. Santaolalla, C. Villanueva Munoz, C. Willmott, C. Yuste

2010 JINST 5 T03006

Universidad Autónoma de Madrid, Madrid, Spain
C. Albajar, M. Blanco Otano, J.F. de Trocóniz, A. Garcia Raboso, J.O. Lopez Berengueres

Universidad de Oviedo, Oviedo, Spain
J. Cuevas, J. Fernandez Menendez, I. Gonzalez Caballero, L. Lloret Iglesias, H. Naves Sordo, J.M. Vizan Garcia

Instituto de Física de Cantabria (IFCA), CSIC-Universidad de Cantabria, Santander, Spain
I.J. Cabrillo, A. Calderon, S.H. Chuang, I. Diaz Merino, C. Diez Gonzalez, J. Duarte Campderros, M. Fernandez, G. Gomez, J. Gonzalez Sanchez, R. Gonzalez Suarez, C. Jorda, P. Lobelle Pardo, A. Lopez Virto, J. Marco, R. Marco, C. Martinez Rivero, P. Martinez Ruiz del Arbol, F. Matorras, T. Rodrigo, A. Ruiz Jimeno, L. Scodellaro, M. Sobron Sanudo, I. Vila, R. Vilar Cortabitarte

CERN, European Organization for Nuclear Research, Geneva, Switzerland
D. Abbaneo, E. Albert, M. Alidra, S. Ashby, E. Auffray, J. Baechler, P. Baillon, A.H. Ball, S.L. Bally, D. Barney, F. Beaudette[19], R. Bellan, D. Benedetti, G. Benelli, C. Bernet, P. Bloch, S. Bolognesi, M. Bona, J. Bos, N. Bourgeois, T. Bourrel, H. Breuker, K. Bunkowski, D. Campi, T. Camporesi, E. Cano, A. Cattai, J.P. Chatelain, M. Chauvey, T. Christiansen, J.A. Coarasa Perez, A. Conde Garcia, R. Covarelli, B. Curé, A. De Roeck, V. Delachenal, D. Deyrail, S. Di Vincenzo[20], S. Dos Santos, T. Dupont, L.M. Edera, A. Elliott-Peisert, M. Eppard, M. Favre, N. Frank, W. Funk, A. Gaddi, M. Gastal, M. Gateau, H. Gerwig, D. Gigi, K. Gill, D. Giordano, J.P. Girod, F. Glege, R. Gomez-Reino Garrido, R. Goudard, S. Gowdy, R. Guida, L. Guiducci, J. Gutleber, M. Hansen, C. Hartl, J. Harvey, B. Hegner, H.F. Hoffmann, A. Holzner, A. Honma, M. Huhtinen, V. Innocente, P. Janot, G. Le Godec, P. Lecoq, C. Leonidopoulos, R. Loos, C. Lourenço, A. Lyonnet, A. Macpherson, N. Magini, J.D. Maillefaud, G. Maire, T. Mäki, L. Malgeri, M. Mannelli, L. Masetti, F. Meijers, P. Meridiani, S. Mersi, E. Meschi, A. Meynet Cordonnier, R. Moser, M. Mulders, J. Mulon, M. Noy, A. Oh, G. Olesen, A. Onnela, T. Orimoto, L. Orsini, E. Perez, G. Perinic, J.F. Pernot, P. Petagna, P. Petiot, A. Petrilli, A. Pfeiffer, M. Pierini, M. Pimiä, R. Pintus, B. Pirollet, H. Postema, A. Racz, S. Ravat, S.B. Rew, J. Rodrigues Antunes, G. Rolandi[21], M. Rovere, V. Ryjov, H. Sakulin, D. Samyn, H. Sauce, C. Schäfer, W.D. Schlatter, M. Schröder, C. Schwick, A. Sciaba, I. Segoni, A. Sharma, N. Siegrist, P. Siegrist, N. Sinanis, T. Sobrier, P. Sphicas[22], D. Spiga, M. Spiropulu[17], F. Stöckli, P. Traczyk, P. Tropea, J. Troska, A. Tsirou, L. Veillet, G.I. Veres, M. Voutilainen, P. Wertelaers, M. Zanetti

Paul Scherrer Institut, Villigen, Switzerland
W. Bertl, K. Deiters, W. Erdmann, K. Gabathuler, R. Horisberger, Q. Ingram, H.C. Kaestli, S. König, D. Kotlinski, U. Langenegger, F. Meier, D. Renker, T. Rohe, J. Sibille[23], A. Starodumov[24]

Institute for Particle Physics, ETH Zurich, Zurich, Switzerland
B. Betev, L. Caminada[25], Z. Chen, S. Cittolin, D.R. Da Silva Di Calafiori, S. Dambach[25], G. Dissertori, M. Dittmar, C. Eggel[25], J. Eugster, G. Faber, K. Freudenreich, C. Grab, A. Hervé, W. Hintz, P. Lecomte, P.D. Luckey, W. Lustermann, C. Marchica[25], P. Milenovic[26], F. Moortgat, A. Nardulli, F. Nessi-Tedaldi, L. Pape, F. Pauss, T. Punz, A. Rizzi, F.J. Ronga, L. Sala, A.K. Sanchez, M.-C. Sawley, V. Sordini, B. Stieger, L. Tauscher[†], A. Thea, K. Theofilatos, D. Treille, P. Trüb[25], M. Weber, L. Wehrli, J. Weng, S. Zelepoukine[27]

2010 JINST 5 T03006

Universität Zürich, Zurich, Switzerland
C. Amsler, V. Chiochia, S. De Visscher, C. Regenfus, P. Robmann, T. Rommerskirchen, A. Schmidt, D. Tsirigkas, L. Wilke

National Central University, Chung-Li, Taiwan
Y.H. Chang, E.A. Chen, W.T. Chen, A. Go, C.M. Kuo, S.W. Li, W. Lin

National Taiwan University (NTU), Taipei, Taiwan
P. Bartalini, P. Chang, Y. Chao, K.F. Chen, W.-S. Hou, Y. Hsiung, Y.J. Lei, S.W. Lin, R.-S. Lu, J. Schümann, J.G. Shiu, Y.M. Tzeng, K. Ueno, Y. Velikzhanin, C.C. Wang, M. Wang

Cukurova University, Adana, Turkey
A. Adiguzel, A. Ayhan, A. Azman Gokce, M.N. Bakirci, S. Cerci, I. Dumanoglu, E. Eskut, S. Girgis, E. Gurpinar, I. Hos, T. Karaman, T. Karaman, A. Kayis Topaksu, P. Kurt, G. Önengüt, G. Önengüt Gökbulut, K. Ozdemir, S. Ozturk, A. Polatöz, K. Sogut[28], B. Tali, H. Topakli, D. Uzun, L.N. Vergili, M. Vergili

Middle East Technical University, Physics Department, Ankara, Turkey
I.V. Akin, T. Aliev, S. Bilmis, M. Deniz, H. Gamsizkan, A.M. Guler, K. Öcalan, M. Serin, R. Sever, U.E. Surat, M. Zeyrek

Bogaziçi University, Department of Physics, Istanbul, Turkey
M. Deliomeroglu, D. Demir[29], E. Gülmez, A. Halu, B. Isildak, M. Kaya[30], O. Kaya[30], S. Ozkorucuklu[31], N. Sonmez[32]

National Scientific Center, Kharkov Institute of Physics and Technology, Kharkov, Ukraine
L. Levchuk, S. Lukyanenko, D. Soroka, S. Zub

University of Bristol, Bristol, United Kingdom
F. Bostock, J.J. Brooke, T.L. Cheng, D. Cussans, R. Frazier, J. Goldstein, N. Grant, M. Hansen, G.P. Heath, H.F. Heath, C. Hill, B. Huckvale, J. Jackson, C.K. Mackay, S. Metson, D.M. Newbold[33], K. Nirunpong, V.J. Smith, J. Velthuis, R. Walton

Rutherford Appleton Laboratory, Didcot, United Kingdom
K.W. Bell, C. Brew, R.M. Brown, B. Camanzi, D.J.A. Cockerill, J.A. Coughlan, N.I. Geddes, K. Harder, S. Harper, B.W. Kennedy, P. Murray, C.H. Shepherd-Themistocleous, I.R. Tomalin, J.H. Williams[†], W.J. Womersley, S.D. Worm

Imperial College, University of London, London, United Kingdom
R. Bainbridge, G. Ball, J. Ballin, R. Beuselinck, O. Buchmuller, D. Colling, N. Cripps, G. Davies, M. Della Negra, C. Foudas, J. Fulcher, D. Futyan, G. Hall, J. Hays, G. Iles, G. Karapostoli, B.C. MacEvoy, A.-M. Magnan, J. Marrouche, J. Nash, A. Nikitenko[24], A. Papageorgiou, M. Pesaresi, K. Petridis, M. Pioppi[34], D.M. Raymond, N. Rompotis, A. Rose, M.J. Ryan, C. Seez, P. Sharp, G. Sidiropoulos[1], M. Stettler, M. Stoye, M. Takahashi, A. Tapper, C. Timlin, S. Tourneur, M. Vazquez Acosta, T. Virdee[1], S. Wakefield, D. Wardrope, T. Whyntie, M. Wingham

Brunel University, Uxbridge, United Kingdom
J.E. Cole, I. Goitom, P.R. Hobson, A. Khan, P. Kyberd, D. Leslie, C. Munro, I.D. Reid, C. Siamitros, R. Taylor, L. Teodorescu, I. Yaselli

2010 JINST 5 T03006

Boston University, Boston, U.S.A.
T. Bose, M. Carleton, E. Hazen, A.H. Heering, A. Heister, J. St. John, P. Lawson, D. Lazic, D. Osborne, J. Rohlf, L. Sulak, S. Wu

Brown University, Providence, U.S.A.
J. Andrea, A. Avetisyan, S. Bhattacharya, J.P. Chou, D. Cutts, S. Esen, G. Kukartsev, G. Landsberg, M. Narain, D. Nguyen, T. Speer, K.V. Tsang

University of California, Davis, Davis, U.S.A.
R. Breedon, M. Calderon De La Barca Sanchez, M. Case, D. Cebra, M. Chertok, J. Conway, P.T. Cox, J. Dolen, R. Erbacher, E. Friis, W. Ko, A. Kopecky, R. Lander, A. Lister, H. Liu, S. Maruyama, T. Miceli, M. Nikolic, D. Pellett, J. Robles, M. Searle, J. Smith, M. Squires, J. Stilley, M. Tripathi, R. Vasquez Sierra, C. Veelken

University of California, Los Angeles, Los Angeles, U.S.A.
V. Andreev, K. Arisaka, D. Cline, R. Cousins, S. Erhan[1], J. Hauser, M. Ignatenko, C. Jarvis, J. Mumford, C. Plager, G. Rakness, P. Schlein[†], J. Tucker, V. Valuev, R. Wallny, X. Yang

University of California, Riverside, Riverside, U.S.A.
J. Babb, M. Bose, A. Chandra, R. Clare, J.A. Ellison, J.W. Gary, G. Hanson, G.Y. Jeng, S.C. Kao, F. Liu, H. Liu, A. Luthra, H. Nguyen, G. Pasztor[35], A. Satpathy, B.C. Shen[†], R. Stringer, J. Sturdy, V. Sytnik, R. Wilken, S. Wimpenny

University of California, San Diego, La Jolla, U.S.A.
J.G. Branson, E. Dusinberre, D. Evans, F. Golf, R. Kelley, M. Lebourgeois, J. Letts, E. Lipeles, B. Mangano, J. Muelmenstaedt, M. Norman, S. Padhi, A. Petrucci, H. Pi, M. Pieri, R. Ranieri, M. Sani, V. Sharma, S. Simon, F. Würthwein, A. Yagil

University of California, Santa Barbara, Santa Barbara, U.S.A.
C. Campagnari, M. D'Alfonso, T. Danielson, J. Garberson, J. Incandela, C. Justus, P. Kalavase, S.A. Koay, D. Kovalskyi, V. Krutelyov, J. Lamb, S. Lowette, V. Pavlunin, F. Rebassoo, J. Ribnik, J. Richman, R. Rossin, D. Stuart, W. To, J.R. Vlimant, M. Witherell

California Institute of Technology, Pasadena, U.S.A.
A. Apresyan, A. Bornheim, J. Bunn, M. Chiorboli, M. Gataullin, D. Kcira, V. Litvine, Y. Ma, H.B. Newman, C. Rogan, V. Timciuc, J. Veverka, R. Wilkinson, Y. Yang, L. Zhang, K. Zhu, R.Y. Zhu

Carnegie Mellon University, Pittsburgh, U.S.A.
B. Akgun, R. Carroll, T. Ferguson, D.W. Jang, S.Y. Jun, M. Paulini, J. Russ, N. Terentyev, H. Vogel, I. Vorobiev

University of Colorado at Boulder, Boulder, U.S.A.
J.P. Cumalat, M.E. Dinardo, B.R. Drell, W.T. Ford, B. Heyburn, E. Luiggi Lopez, U. Nauenberg, K. Stenson, K. Ulmer, S.R. Wagner, S.L. Zang

Cornell University, Ithaca, U.S.A.
L. Agostino, J. Alexander, F. Blekman, D. Cassel, A. Chatterjee, S. Das, L.K. Gibbons, B. Heltsley, W. Hopkins, A. Khukhunaishvili, B. Kreis, V. Kuznetsov, J.R. Patterson, D. Puigh, A. Ryd, X. Shi, S. Stroiney, W. Sun, W.D. Teo, J. Thom, J. Vaughan, Y. Weng, P. Wittich

2010 JINST 5 T03006

Fairfield University, Fairfield, U.S.A.
C.P. Beetz, G. Cirino, C. Sanzeni, D. Winn

Fermi National Accelerator Laboratory, Batavia, U.S.A.
S. Abdullin, M.A. Afaq[1], M. Albrow, B. Ananthan, G. Apollinari, M. Atac, W. Badgett, L. Bagby, J.A. Bakken, B. Baldin, S. Banerjee, K. Banicz, L.A.T. Bauerdick, A. Beretvas, J. Berryhill, P.C. Bhat, K. Biery, M. Binkley, I. Bloch, F. Borcherding, A.M. Brett, K. Burkett, J.N. Butler, V. Chetluru, H.W.K. Cheung, F. Chlebana, I. Churin, S. Cihangir, M. Crawford, W. Dagenhart, M. Demarteau, G. Derylo, D. Dykstra, D.P. Eartly, J.E. Elias, V.D. Elvira, D. Evans, L. Feng, M. Fischler, I. Fisk, S. Foulkes, J. Freeman, P. Gartung, E. Gottschalk, T. Grassi, D. Green, Y. Guo, O. Gutsche, A. Hahn, J. Hanlon, R.M. Harris, B. Holzman, J. Howell, D. Hufnagel, E. James, H. Jensen, M. Johnson, C.D. Jones, U. Joshi, E. Juska, J. Kaiser, B. Klima, S. Kossiakov, K. Kousouris, S. Kwan, C.M. Lei, P. Limon, J.A. Lopez Perez, S. Los, L. Lueking, G. Lukhanin, S. Lusin[1], J. Lykken, K. Maeshima, J.M. Marraffino, D. Mason, P. McBride, T. Miao, K. Mishra, S. Moccia, R. Mommsen, S. Mrenna, A.S. Muhammad, C. Newman-Holmes, C. Noeding, V. O'Dell, O. Prokofyev, R. Rivera, C.H. Rivetta, A. Ronzhin, P. Rossman, S. Ryu, V. Sekhri, E. Sexton-Kennedy, I. Sfiligoi, S. Sharma, T.M. Shaw, D. Shpakov, E. Skup, R.P. Smith[†], A. Soha, W.J. Spalding, L. Spiegel, I. Suzuki, P. Tan, W. Tanenbaum, S. Tkaczyk[1], R. Trentadue[1], L. Uplegger, E.W. Vaandering, R. Vidal, J. Whitmore, E. Wicklund, W. Wu, J. Yarba, F. Yumiceva, J.C. Yun

University of Florida, Gainesville, U.S.A.
D. Acosta, P. Avery, V. Barashko, D. Bourilkov, M. Chen, G.P. Di Giovanni, D. Dobur, A. Drozdetskiy, R.D. Field, Y. Fu, I.K. Furic, J. Gartner, D. Holmes, B. Kim, S. Klimenko, J. Konigsberg, A. Korytov, K. Kotov, A. Kropivnitskaya, T. Kypreos, A. Madorsky, K. Matchev, G. Mitselmakher, Y. Pakhotin, J. Piedra Gomez, C. Prescott, V. Rapsevicius, R. Remington, M. Schmitt, B. Scurlock, D. Wang, J. Yelton

Florida International University, Miami, U.S.A.
C. Ceron, V. Gaultney, L. Kramer, L.M. Lebolo, S. Linn, P. Markowitz, G. Martinez, J.L. Rodriguez

Florida State University, Tallahassee, U.S.A.
T. Adams, A. Askew, H. Baer, M. Bertoldi, J. Chen, W.G.D. Dharmaratna, S.V. Gleyzer, J. Haas, S. Hagopian, V. Hagopian, M. Jenkins, K.F. Johnson, E. Prettner, H. Prosper, S. Sekmen

Florida Institute of Technology, Melbourne, U.S.A.
M.M. Baarmand, S. Guragain, M. Hohlmann, H. Kalakhety, H. Mermerkaya, R. Ralich, I. Vodopiyanov

University of Illinois at Chicago (UIC), Chicago, U.S.A.
B. Abelev, M.R. Adams, I.M. Anghel, L. Apanasevich, V.E. Bazterra, R.R. Betts, J. Callner, M.A. Castro, R. Cavanaugh, C. Dragoiu, E.J. Garcia-Solis, C.E. Gerber, D.J. Hofman, S. Khalatian, C. Mironov, E. Shabalina, A. Smoron, N. Varelas

The University of Iowa, Iowa City, U.S.A.
U. Akgun, E.A. Albayrak, A.S. Ayan, B. Bilki, R. Briggs, K. Cankocak[36], K. Chung, W. Clarida, P. Debbins, F. Duru, F.D. Ingram, C.K. Lae, E. McCliment, J.-P. Merlo, A. Mestvirishvili, M.J. Miller, A. Moeller, J. Nachtman, C.R. Newsom, E. Norbeck, J. Olson, Y. Onel, F. Ozok, J. Parsons, I. Schmidt, S. Sen, J. Wetzel, T. Yetkin, K. Yi

2010 JINST 5 T03006

Johns Hopkins University, Baltimore, U.S.A.
B.A. Barnett, B. Blumenfeld, A. Bonato, C.Y. Chien, D. Fehling, G. Giurgiu, A.V. Gritsan, Z.J. Guo, P. Maksimovic, S. Rappoccio, M. Swartz, N.V. Tran, Y. Zhang

The University of Kansas, Lawrence, U.S.A.
P. Baringer, A. Bean, O. Grachov, M. Murray, V. Radicci, S. Sanders, J.S. Wood, V. Zhukova

Kansas State University, Manhattan, U.S.A.
D. Bandurin, T. Bolton, K. Kaadze, A. Liu, Y. Maravin, D. Onoprienko, I. Svintradze, Z. Wan

Lawrence Livermore National Laboratory, Livermore, U.S.A.
J. Gronberg, J. Hollar, D. Lange, D. Wright

University of Maryland, College Park, U.S.A.
D. Baden, R. Bard, M. Boutemeur, S.C. Eno, D. Ferencek, N.J. Hadley, R.G. Kellogg, M. Kirn, S. Kunori, K. Rossato, P. Rumerio, F. Santanastasio, A. Skuja, J. Temple, M.B. Tonjes, S.C. Tonwar, T. Toole, E. Twedt

Massachusetts Institute of Technology, Cambridge, U.S.A.
B. Alver, G. Bauer, J. Bendavid, W. Busza, E. Butz, I.A. Cali, M. Chan, D. D'Enterria, P. Everaerts, G. Gomez Ceballos, K.A. Hahn, P. Harris, S. Jaditz, Y. Kim, M. Klute, Y.-J. Lee, W. Li, C. Loizides, T. Ma, M. Miller, S. Nahn, C. Paus, C. Roland, G. Roland, M. Rudolph, G. Stephans, K. Sumorok, K. Sung, S. Vaurynovich, E.A. Wenger, B. Wyslouch, S. Xie, Y. Yilmaz, A.S. Yoon

University of Minnesota, Minneapolis, U.S.A.
D. Bailleux, S.I. Cooper, P. Cushman, B. Dahmes, A. De Benedetti, A. Dolgopolov, P.R. Dudero, R. Egeland, G. Franzoni, J. Haupt, A. Inyakin[37], K. Klapoetke, Y. Kubota, J. Mans, N. Mirman, D. Petyt, V. Rekovic, R. Rusack, M. Schroeder, A. Singovsky, J. Zhang

University of Mississippi, University, U.S.A.
L.M. Cremaldi, R. Godang, R. Kroeger, L. Perera, R. Rahmat, D.A. Sanders, P. Sonnek, D. Summers

University of Nebraska-Lincoln, Lincoln, U.S.A.
K. Bloom, B. Bockelman, S. Bose, J. Butt, D.R. Claes, A. Dominguez, M. Eads, J. Keller, T. Kelly, I. Kravchenko, J. Lazo-Flores, C. Lundstedt, H. Malbouisson, S. Malik, G.R. Snow

State University of New York at Buffalo, Buffalo, U.S.A.
U. Baur, I. Iashvili, A. Kharchilava, A. Kumar, K. Smith, M. Strang

Northeastern University, Boston, U.S.A.
G. Alverson, E. Barberis, O. Boeriu, G. Eulisse, G. Govi, T. McCauley, Y. Musienko[38], S. Muzaffar, I. Osborne, T. Paul, S. Reucroft, J. Swain, L. Taylor, L. Tuura

Northwestern University, Evanston, U.S.A.
A. Anastassov, B. Gobbi, A. Kubik, R.A. Ofierzynski, A. Pozdnyakov, M. Schmitt, S. Stoynev, M. Velasco, S. Won

University of Notre Dame, Notre Dame, U.S.A.
L. Antonelli, D. Berry, M. Hildreth, C. Jessop, D.J. Karmgard, T. Kolberg, K. Lannon, S. Lynch, N. Marinelli, D.M. Morse, R. Ruchti, J. Slaunwhite, J. Warchol, M. Wayne

2010 JINST 5 T03006

The Ohio State University, Columbus, U.S.A.
B. Bylsma, L.S. Durkin, J. Gilmore[39], J. Gu, P. Killewald, T.Y. Ling, G. Williams

Princeton University, Princeton, U.S.A.
N. Adam, E. Berry, P. Elmer, A. Garmash, D. Gerbaudo, V. Halyo, A. Hunt, J. Jones, E. Laird, D. Marlow, T. Medvedeva, M. Mooney, J. Olsen, P. Piroué, D. Stickland, C. Tully, J.S. Werner, T. Wildish, Z. Xie, A. Zuranski

University of Puerto Rico, Mayaguez, U.S.A.
J.G. Acosta, M. Bonnett Del Alamo, X.T. Huang, A. Lopez, H. Mendez, S. Oliveros, J.E. Ramirez Vargas, N. Santacruz, A. Zatzerklyany

Purdue University, West Lafayette, U.S.A.
E. Alagoz, E. Antillon, V.E. Barnes, G. Bolla, D. Bortoletto, A. Everett, A.F. Garfinkel, Z. Gecse, L. Gutay, N. Ippolito, M. Jones, O. Koybasi, A.T. Laasanen, N. Leonardo, C. Liu, V. Maroussov, P. Merkel, D.H. Miller, N. Neumeister, A. Sedov, I. Shipsey, H.D. Yoo, Y. Zheng

Purdue University Calumet, Hammond, U.S.A.
P. Jindal, N. Parashar

Rice University, Houston, U.S.A.
V. Cuplov, K.M. Ecklund, F.J.M. Geurts, J.H. Liu, D. Maronde, M. Matveev, B.P. Padley, R. Redjimi, J. Roberts, L. Sabbatini, A. Tumanov

University of Rochester, Rochester, U.S.A.
B. Betchart, A. Bodek, H. Budd, Y.S. Chung, P. de Barbaro, R. Demina, H. Flacher, Y. Gotra, A. Harel, S. Korjenevski, D.C. Miner, D. Orbaker, G. Petrillo, D. Vishnevskiy, M. Zielinski

The Rockefeller University, New York, U.S.A.
A. Bhatti, L. Demortier, K. Goulianos, K. Hatakeyama, G. Lungu, C. Mesropian, M. Yan

Rutgers, the State University of New Jersey, Piscataway, U.S.A.
O. Atramentov, E. Bartz, Y. Gershtein, E. Halkiadakis, D. Hits, A. Lath, K. Rose, S. Schnetzer, S. Somalwar, R. Stone, S. Thomas, T.L. Watts

University of Tennessee, Knoxville, U.S.A.
G. Cerizza, M. Hollingsworth, S. Spanier, Z.C. Yang, A. York

Texas A&M University, College Station, U.S.A.
J. Asaadi, A. Aurisano, R. Eusebi, A. Golyash, A. Gurrola, T. Kamon, C.N. Nguyen, J. Pivarski, A. Safonov, S. Sengupta, D. Toback, M. Weinberger

Texas Tech University, Lubbock, U.S.A.
N. Akchurin, L. Berntzon, K. Gumus, C. Jeong, H. Kim, S.W. Lee, S. Popescu, Y. Roh, A. Sill, I. Volobouev, E. Washington, R. Wigmans, E. Yazgan

Vanderbilt University, Nashville, U.S.A.
D. Engh, C. Florez, W. Johns, S. Pathak, P. Sheldon

University of Virginia, Charlottesville, U.S.A.
D. Andelin, M.W. Arenton, M. Balazs, S. Boutle, M. Buehler, S. Conetti, B. Cox, R. Hirosky, A. Ledovskoy, C. Neu, D. Phillips II, M. Ronquest, R. Yohay

2010 JINST 5 T03006

Wayne State University, Detroit, U.S.A.
S. Gollapinni, K. Gunthoti, R. Harr, P.E. Karchin, M. Mattson, A. Sakharov

University of Wisconsin, Madison, U.S.A.
M. Anderson, M. Bachtis, J.N. Bellinger, D. Carlsmith, I. Crotty[1], S. Dasu, S. Dutta, J. Efron, F. Feyzi, K. Flood, L. Gray, K.S. Grogg, M. Grothe, R. Hall-Wilton[1], M. Jaworski, P. Klabbers, J. Klukas, A. Lanaro, C. Lazaridis, J. Leonard, R. Loveless, M. Magrans de Abril, A. Mohapatra, G. Ott, G. Polese, D. Reeder, A. Savin, W.H. Smith, A. Sourkov[40], J. Swanson, M. Weinberg, D. Wenman, M. Wensveen, A. White

†: Deceased
1: Also at CERN, European Organization for Nuclear Research, Geneva, Switzerland
2: Also at Universidade Federal do ABC, Santo Andre, Brazil
3: Also at Soltan Institute for Nuclear Studies, Warsaw, Poland
4: Also at Université de Haute-Alsace, Mulhouse, France
5: Also at Centre de Calcul de l'Institut National de Physique Nucleaire et de Physique des Particules (IN2P3), Villeurbanne, France
6: Also at Moscow State University, Moscow, Russia
7: Also at Institute of Nuclear Research ATOMKI, Debrecen, Hungary
8: Also at University of California, San Diego, La Jolla, U.S.A.
9: Also at Tata Institute of Fundamental Research - HECR, Mumbai, India
10: Also at University of Visva-Bharati, Santiniketan, India
11: Also at Facolta' Ingegneria Universita' di Roma "La Sapienza", Roma, Italy
12: Also at Università della Basilicata, Potenza, Italy
13: Also at Laboratori Nazionali di Legnaro dell' INFN, Legnaro, Italy
14: Also at Università di Trento, Trento, Italy
15: Also at ENEA - Casaccia Research Center, S. Maria di Galeria, Italy
16: Also at Warsaw University of Technology, Institute of Electronic Systems, Warsaw, Poland
17: Also at California Institute of Technology, Pasadena, U.S.A.
18: Also at Faculty of Physics of University of Belgrade, Belgrade, Serbia
19: Also at Laboratoire Leprince-Ringuet, Ecole Polytechnique, IN2P3-CNRS, Palaiseau, France
20: Also at Alstom Contracting, Geneve, Switzerland
21: Also at Scuola Normale e Sezione dell' INFN, Pisa, Italy
22: Also at University of Athens, Athens, Greece
23: Also at The University of Kansas, Lawrence, U.S.A.
24: Also at Institute for Theoretical and Experimental Physics, Moscow, Russia
25: Also at Paul Scherrer Institut, Villigen, Switzerland
26: Also at Vinca Institute of Nuclear Sciences, Belgrade, Serbia
27: Also at University of Wisconsin, Madison, U.S.A.
28: Also at Mersin University, Mersin, Turkey
29: Also at Izmir Institute of Technology, Izmir, Turkey
30: Also at Kafkas University, Kars, Turkey
31: Also at Suleyman Demirel University, Isparta, Turkey
32: Also at Ege University, Izmir, Turkey

2010 JINST 5 T03006

33: Also at Rutherford Appleton Laboratory, Didcot, United Kingdom
34: Also at INFN Sezione di Perugia; Universita di Perugia, Perugia, Italy
35: Also at KFKI Research Institute for Particle and Nuclear Physics, Budapest, Hungary
36: Also at Istanbul Technical University, Istanbul, Turkey
37: Also at University of Minnesota, Minneapolis, U.S.A.
38: Also at Institute for Nuclear Research, Moscow, Russia
39: Also at Texas A&M University, College Station, U.S.A.
40: Also at State Research Center of Russian Federation, Institute for High Energy Physics, Protvino, Russia

2010 JINST 5 T03006